LOT 17
IN OR 1896/1134 (EX WELL/ELEC
ESMT PT OR 948/1691)

MURPHY JEFFREY L & MELONIE S
139 LONG POINT DR
FERNANDINA BEACH, FL 32034

2024

03-6N-29-00SP-0017-0000

BUILDING CHARACTERISTICS

ELEMENT	CD	CONSTRUCTION
Exterior Wall	10	ABOVE AVG 70
Exterior Wall	17	CB STUCCO 30
Roof Structur	08	IRREGULAR 100
Roof Cover	07	CONC TILE 100
Interior Wall	05	DRYWALL 100
Interior Floo	11	CLAY TILE 70
Interior Floo	14	CARPET 30
Air Condition	03	CENTRAL 100
Heating Type	04	AIR DUCTED 100
Bedrooms		4 100
Bathrooms		4.5 100
Frame	02	WOOD FRAME 100
Stories	4.	4. 100
Units		0 100
Quality	05	Quality Level 05
DOR CODE	0100	SINGLE FAMILY
MAP NUM		MKT AREA 10
NEIGHBORHOOD/LOC	10007.00	

AREA TYPE	TOTAL GROSS AREA	PCT OF BASE	TOT ADJ AREA	SUBAREA MARKET VALUE
BAS	756	100	756	156,368
BAS	84	100	84	17,374
BAS	165	100	165	34,128
FGR	801	55	441	91,215
FOP	48	30	14	2,896
FOP	57	30	17	3,516
FOP	60	30	18	3,723
FOP	91	30	27	5,585
FOP	105	30	32	6,619
FOP	340	30	102	21,097
TOTALS	7,756		6,350	1,313,409

MARKET ADJUSTMENTS

TYPE	MDL	EFF. AREA	TOT ADJ PTS	EFF. BASE RATE	REPL. COST NEW	AYB	EYB	ECON	FNCT		NORM	% COND
0500	11	6,350	156.0736	234.11	1,486,598	1999	1999	0	0	0	11.65	88.35

1 SFR CUST – 100% - 2014 Heated Area: 5455 HX Base Yr 2014

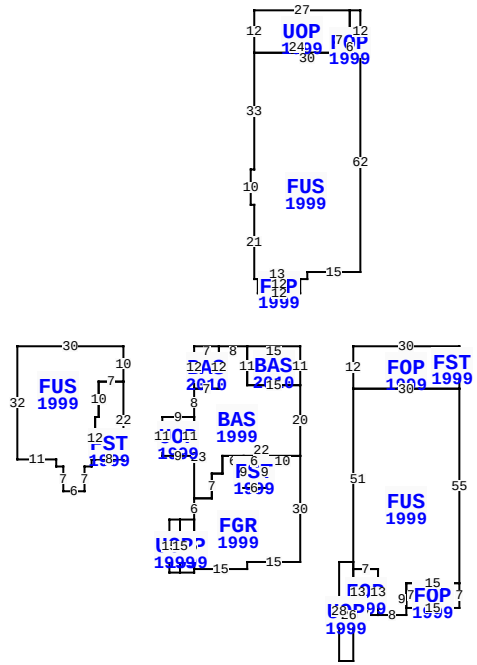

** This building has 20 Sub-Areas

139 LONG POINT DR, FERNANDINA BEACH

BLD DATE		LGL DATE	
XF DATE		LAND DATE	04/08/2024 MLU
INC DATE		AG DATE	

NASSAU COUNTY PROPERTY

PAGE 1 of 1 5

VALUATION SUMMARY

VALUATION BY		STANDARD
Tax Group: 5	Tax Dist:	
BUILDING MARKET VALUE		1,313,409
TOTAL MARKET OB/XF VALUE		77,644
TOTAL LAND VALUE - MARKET		700,000
TOTAL MARKET VALUE		2,091,053
SOH/AGL Deduction		907,109
ASSESSED VALUE		1,183,944
TOTAL EXEMPTION VALUE	HX HB	50,000
BASE TAXABLE VALUE		1,133,944
TOTAL JUST VALUE		2,091,053
NCON VALUE		0
INCOME VALUE		
PREVIOUS YEAR MKT VALUE		1,934,547

PERMIT NUM	DESCRIPTION	AMT	ISSUED
B9905763	SWIM POOL	12,000	02/01/1999
B9805243	NEW CONSTR	240,229	08/01/1998

SALES DATA

OFF RECORD Number	DATE	TYPE INST	Q U	V I	RSN CD	SALE PRICE
1896/1134	12/31/2013	WD	Q	I	02	1,325,000
GRANTOR: KRUSE STEPHEN L & JAC						
GRANTEE: MURPHY JEFFREY L &						
1476/0277	2/02/2007	WD	Q	I		1,750,000
GRANTOR: JOHNSON JAMES WADE						
GRANTEE: KRUSE STEPHEN L & J						

BUILDING NOTES

BUILDING DIMENSIONS

BAS=[YR=2010] W15 BAS=[YR=1999] W8 BAS=[YR=2010] W7 S12 E7 N12 $ S12 W7 S8UOP=[YR=1999] W9S11E9N11$S23 FGR=[YR=1999] S6FOP=[YR=1999] W4UOP=[YR=1999] W3 S15E3N15$S15E4N15$S14E15N2E15 N30W10FST=[YR=1999] S9W6N9E6$S9W6N9 W6S5W3S7W5$E5N7E3N5E22N20W15 N11$S11E15N11$PTR=E15FOP=[YR=1999] E30S2FST=[YR=1999] W4S5E4N5$W4S5E4S5 FUS=[YR=1999] S55FOP=[YR=1999] S7W15N7E15$ W15S9W8FOP=[YR=1999] N13W7S13E7$N13 W7UOP=[YR=1999] S26W4N28E4S2$N51E30$ W30N12$W15$ PTR= N15FOP=[YR=1999] N4 FUS=[YR=1999] E2N2E15N62FOP=[YR=1999] N12 W3UOP=[YR=1999] W27S12E24N7E3N5$S5W3 S7E6$W30S33W1S10E1S21E13$W12S4 E12$S15$ PTR= W50 FUS=[YR=1999] W30 S32 E11 S2 E2S7E6N7E2N2E1

EXTRA FEATURES

LN	OB/XF CODE	DESCRIPTION	BLD	CAP	L	W	UNITS	UT	Adj R	ADJ UNIT PRICE	ORIG COND	YEAR ON	YEAR ACTUAL	Q	% COND	OB/XF MKT VALUE	NOTES
1	0504	FP-ELECTRI	0	100	0	0	1.00	UT	2,000.00	2,000.00	100	1999	1999	3	83	1,660	
2	0858	SCULP CONC	0	100	0	0	1,776.00	SF	13.00	13.00	100	1999	1999	3	93	21,472	
3	1126	CB/STC 8"	0	100	0	0	913.00	SF	8.00	8.00	100	1999	1999	3	77	5,624	
4	0861	POOL GUNIT	0	100	0	0	349.00	SF	85.00	85.00	100	1999	1999	3	23	6,823	
5	0462	ST/AL FNC	0	100	0	0	174.00	SF	10.00	10.00	100	1999	1999	3	27	470	
6	0300	BOAT DCK W	0	100	0	0	2,252.00	SF	40.00	40.00	100	1999	1999	3	27	24,322	
7	0097	AWNING CN	0	100	0	0	49.00	SF	65.00	65.00	100	1999	1999	3	40	1,274	
8	0410	ELEVATOR	0	100	0	0	1.00	UT	10,000.00	10,000.00	100	1999	1999	3	100	10,000	
9	0855	CONC PAVER	0	100	0	0	607.00	SF	10.00	10.00	100	2004	2004	3	84	5,099	
10	0871	POOL HTR R	1	100	0	0	1.00	UT	2,000.00	2,000.00	100	2023	2010		45	900	

TOTAL OB/XF 77,644

LAND DESCRIPTION

LN	USE CODE	CLS	LAND USE DESCRIPTION	CAP	RD	LOC ZONE	FRONT	DEPTH	TOT LND UTS	UNIT TYPE	DT	DPTH FACT	% COND	TOT ADJ	UNIT PRICE	ADJ UNIT PRICE	LAND VALUE	OTHER ADJUSTMENTS AND NOTES	YEAR	DENSITY	DECL	FRZ	YR	CONSRV
1	000132	C	SFR RIVER	100		PUD	0.00	0.00	1.00	LT		1.00	1.00	1.00	700,000.00	700,000.00	700,000							

REVIEW DATE 02/26/2020 BY DJA Total Acres: 0.00 Total Land Value: 700,000 Market: 0 Agricultural: 0 Common: 700,000 PRINTED 08/06/2024 BY SYS