LOT 9
SOUND POINT @ LP PB5/190

HALL JAY C & SUSAN B
128 LONG POINT DR
FERNANDINA BEACH, FL 32034

**2024**

**03-6N-29-00SP-0009-0000**

## NASSAU COUNTY PROPERTY



### BUILDING CHARACTERISTICS

| ELEMENT | CD | CONSTRUCTION |
|---|---|---|
| Exterior Wall | 10 | ABOVE AVG 70 |
| Exterior Wall | 16 | WD FR STUC 30 |
| Roof Structur | 08 | IRREGULAR 100 |
| Roof Cover | 03 | COMP SHNGL 100 |
| Interior Wall | 05 | DRYWALL 100 |
| Interior Floo | 11 | CLAY TILE 70 |
| Interior Floo | 14 | CARPET 30 |
| Air Condition | 03 | CENTRAL 100 |
| Heating Type | 04 | AIR DUCTED 100 |
| Bedrooms | | 3 100 |
| Bathrooms | | 3.5 100 |
| Frame | 02 | WOOD FRAME 100 |
| Stories | 2. | 2. 100 |
| Units | | 0 100 |
| Occupancy | 00 | NONE 100 |
| Quality | 04 | Quality Level 04 |
| DOR CODE | 0100 | SINGLE FAMILY |
| MAP NUM | | MKT AREA 10 |
| NEIGHBORHOOD/LOC | 10007.00 | |

| AREA TYPE | TOTAL GROSS AREA | PCT OF BASE | TOT ADJ AREA | SUBAREA MARKET VALUE |
|---|---|---|---|---|
| BAS | 1,956 | 100 | 1,956 | 285,871 |
| FGR | 513 | 55 | 282 | 41,215 |
| FOP | 117 | 30 | 35 | 5,115 |
| FSP | 209 | 40 | 84 | 12,277 |
| FST | 12 | 55 | 7 | 1,023 |
| FST | 21 | 55 | 12 | 1,754 |
| FUS | 854 | 100 | 854 | 124,813 |
| UOP | 77 | 20 | 15 | 2,193 |
| UOP | 84 | 20 | 17 | 2,484 |
| UOP | 143 | 20 | 29 | 4,238 |
| TOTALS | 5,059 | | 3,604 | 526,728 |

### MARKET ADJUSTMENTS

| TYPE | MDL | EFF. AREA | TOT ADJ PTS | EFF. BASE RATE | REPL. COST NEW | AYB | EYB | ECON | FNCT | | NORM | % COND |
|---|---|---|---|---|---|---|---|---|---|---|---|---|
| 0500 | 01 | 3,604 | 113.4945 | 170.24 | 613,545 | 1994 | 1994 | 0 | 0 | 0 | 14.15 | 85.85 |

1 SFR CUST – 100% - 2022 Heated Area: 2810 HX Base Yr 2022

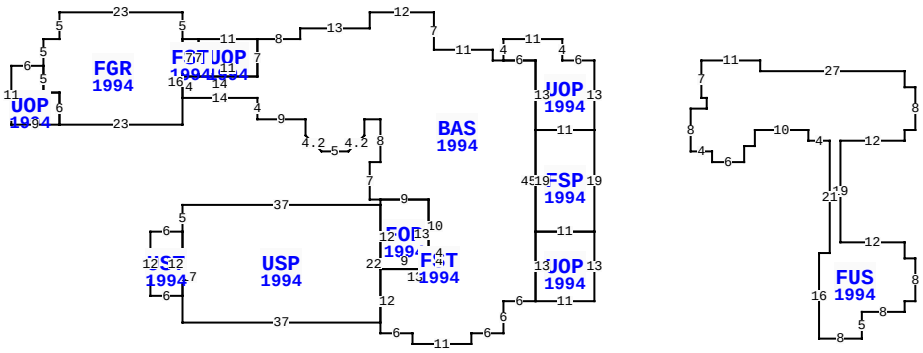


** This building has 13 Sub-Areas

128 LONG POINT DR, FERNANDINA BEACH

| | | | |
|---|---|---|---|
| BLD DATE | | LGL DATE | |
| XF DATE | | LAND DATE | 04/08/2024 MLU |
| INC DATE | | AG DATE | |

### VALUATION SUMMARY

| | | |
|---|---|---|
| VALUATION BY | | STANDARD |
| Tax Group: 5 | Tax Dist: | |
| BUILDING MARKET VALUE | | 526,728 |
| TOTAL MARKET OB/XF VALUE | | 26,128 |
| TOTAL LAND VALUE - MARKET | | 750,000 |
| TOTAL MARKET VALUE | | 1,302,856 |
| SOH/AGL Deduction | | 384,197 |
| ASSESSED VALUE | | 918,659 |
| TOTAL EXEMPTION VALUE | HX HB | 50,000 |
| BASE TAXABLE VALUE | | 868,659 |
| TOTAL JUST VALUE | | 1,302,856 |
| NCON VALUE | | 0 |
| INCOME VALUE | | |
| PREVIOUS YEAR MKT VALUE | | 1,179,683 |

| PERMIT NUM | DESCRIPTION | AMT | ISSUED |
|---|---|---|---|
| B930677 | SWIM POOL | 16,475 | 12/01/1993 |
| B930558 | NEW CONSTR | 146,800 | 10/01/1993 |

### SALES DATA

| OFF RECORD Number | DATE | TYPE INST | Q U / | V I / | RSN CD | SALE PRICE |
|---|---|---|---|---|---|---|
| 2444/1300 | 3/17/2021 | WD | Q | I | 01 | 870,000 |
| GRANTOR: MCNICHOLS DAVID & MAR | | | | | | |
| GRANTEE: HALL JAY C & SUSAN | | | | | | |
| 2376/0854 | 7/16/2020 | WD | Q | I | 01 | 755,000 |
| GRANTOR: REILLY SALLY A REVOCA | | | | | | |
| GRANTEE: MCNICHOLS DAVID & M | | | | | | |

### BUILDING NOTES

### BUILDING DIMENSIONS

UOP=[YR=1994] W6N4W11S4BAS=[YR=1994] W2N2 W11 N7 W12 S3 W13 S2 W8 UOP=[YR=1994] W11 FST=[YR=1994] W3 FGR=[YR=1994] N5 W23 S5 W3 S5 UOP=[YR=1994] W6 S11 E9 N6 W3 N5 $ S5 E3 S6 E23 N16 $ S7 E3 N7 $ S7 E11 N7 $ S7 W14 S4 E14 S4 E9 S3 R3 D3 E5 U3 R3 N3 E3 S8 W2 S7 E2 FOP=[YR=1994] S1 USP=[YR=1994] W37 S5 UST=[YR=1994] W6 S12 E6 N12 $ S17 E37 N22 $ S12 E9 FST=[YR=1994] E4 N3W4 S3 $ N13 W9 $ E9 S10 E4 S3 W13 S12 E6 S2 E11 N2 E6 N6 E6 UOP=[YR=1994] E11 N13 FSP=[YR=1994] N19 W11 S19 E11 $ W11 S13 $ N45 W6$ E6 S13 E11 N13 $ PTR= E20 FUS=[YR=1994] E11 S2 E27 S3 E2 S8 W2S2 W12 S19 E12 S3 E2 S8 W2 S2 W8 S5 W8 N16 E2 N21 W4 N2 W10 S3 W2 S3 W6 N2 W4 N8 E3 N2 W1 N7 $ W20 $ .

### EXTRA FEATURES

| LN | OB/XF CODE | DESCRIPTION | BLD | CAP | L | W | UNITS | UT | Adj R | ADJ UNIT PRICE | ORIG COND | YEAR ON | YEAR ACTUAL | Q | % COND | OB/XF MKT VALUE | NOTES |
|---|---|---|---|---|---|---|---|---|---|---|---|---|---|---|---|---|---|
| 1 | 0504 | FP-ELECTRI | 0 | 100 | 0 | 0 | 1.00 | UT | 2,000.00 | 2,000.00 | 100 | 1994 | 1994 | 3 | 76 | 1,520 | |
| 2 | 0810 | CONCRETE A | 0 | 100 | 5 | 4 | 20.00 | SF | 6.50 | 6.50 | 100 | 1994 | 1994 | 3 | 68 | 88 | |
| 3 | 0855 | CONC PAVER | 0 | 100 | 0 | 0 | 1,776.00 | SF | 7.00 | 7.00 | 100 | 2014 | 2014 | 3 | 95 | 11,810 | |
| 4 | 0825 | BRICK | 0 | 100 | 0 | 0 | 239.00 | SF | 12.50 | 12.50 | 100 | 1994 | 1994 | 3 | 90 | 2,689 | |
| 5 | 0825 | BRICK | 0 | 100 | 0 | 0 | 84.00 | SF | 12.50 | 12.50 | 100 | 1994 | 1994 | 3 | 90 | 945 | |
| 6 | 0861 | POOL GUNIT | 0 | 100 | 0 | 0 | 363.00 | SF | 85.00 | 85.00 | 100 | 1994 | 1994 | 3 | 20 | 6,171 | |
| 7 | 0845 | KOOL DECK | 0 | 100 | 0 | 0 | 98.00 | SF | 7.25 | 7.25 | 100 | 1994 | 1994 | 3 | 68 | 483 | |
| 8 | 1075 | TRELLIS G | 0 | 100 | 11 | 10 | 110.00 | SF | 35.00 | 35.00 | 100 | 1994 | 1994 | 3 | 20 | 770 | |
| 9 | 0845 | KOOL DECK | 0 | 100 | 0 | 0 | 335.00 | SF | 7.25 | 7.25 | 100 | 1994 | 1994 | 3 | 68 | 1,652 | |

### LAND DESCRIPTION

TOTAL OB/XF 26,128

| LN | USE CODE | CLS | LAND USE DESCRIPTION | CAP | RD | LOC ZONE | FRONT | DEPTH | TOT LND UTS | UNIT TYPE | DT | DPTH FACT | % COND | TOT ADJ | UNIT PRICE | ADJ UNIT PRICE | LAND VALUE | OTHER ADJUSTMENTS AND NOTES | YEAR | DENSITY | DECL | FRZ | YR | CONSRV |
|---|---|---|---|---|---|---|---|---|---|---|---|---|---|---|---|---|---|---|---|---|---|---|---|---|
| 1 | 000140 | C | SFR GOLF A | 100 | | PUD | 0.00 | 0.00 | 1.00 | LT | | 1.00 | 1.00 | 1.00 | 750,000.00 | 750,000.00 | 750,000 | | | | | | | |

REVIEW DATE 05/12/2019 BY KBA Total Acres: 0.00 Total Land Value: 750,000 Market: 0 Agricultural: 0 Common: 750,000 PRINTED 08/06/2024 BY SYS