LOT 8
SOUND POINT @ LP PB 5/190

LAGASSE MARTHA SUE
124 LONG POINT DRIVE
FERNANDINA BEACH, FL 32034

2024

03-6N-29-00SP-0008-0000

NASSAU COUNTY PROPERTY

BUILDING CHARACTERISTICS

ELEMENT	CD	CONSTRUCTION
Exterior Wall	16	WD FR STUC 100
Roof Structur	08	IRREGULAR 100
Roof Cover	03	COMP SHNGL 100
Interior Wall	05	DRYWALL 100
Interior Floo	14	CARPET 70
Interior Floo	19	MARBLE 30
Air Condition	03	CENTRAL 100
Heating Type	04	AIR DUCTED 100
Bedrooms		3 100
Bathrooms		3.5 100
Frame	02	WOOD FRAME 100
Stories	2.	2. 100
Units		0 100
Quality	06	Quality Level 06
DOR CODE	0100	SINGLE FAMILY
MAP NUM		MKT AREA 10
NEIGHBORHOOD/LOC	10007.00	

AREA TYPE	TOTAL GROSS AREA	PCT OF BASE	TOT ADJ AREA	SUBAREA MARKET VALUE
BAS	2,736	100	2,736	844,457
BAS	224	100	224	69,137
FGR	761	55	419	129,323
FOP	88	30	26	8,025
FUS	600	100	600	185,188
STR	32	10	3	926
UOP	72	20	14	4,321
UOP	84	20	17	5,247
UOP	726	20	145	44,753
TOTALS	5,323		4,184	1,291,377

MARKET ADJUSTMENTS

TYPE	MDL	EFF. AREA	TOT ADJ PTS	EFF. BASE RATE	REPL. COST NEW	AYB	EYB	ECON	FNCT		NORM	% COND
0500	12	4,184	217.7428	326.61	1,366,536	1992	2012	0	0	0	5.50	94.50

1 SFR CUST – 0% - 2024 Heated Area: 3560 HX Base Yr

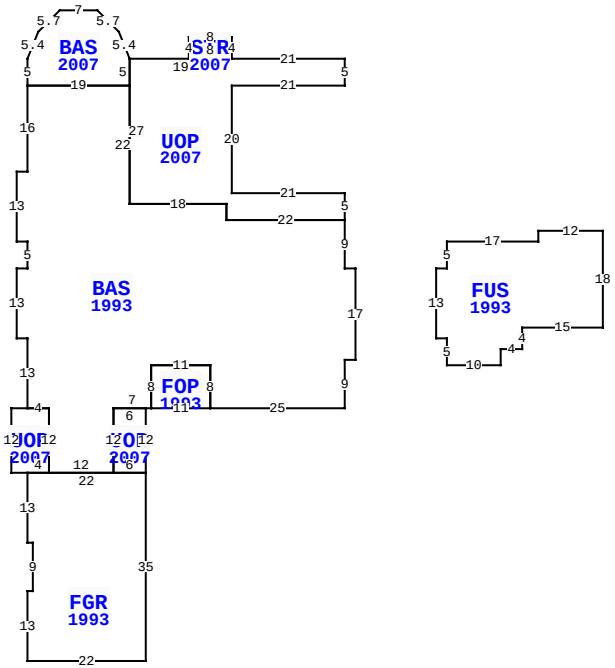

124 LONG POINT DR, FERNANDINA BEACH

BLD DATE	02/15/2008 DJ	LGL DATE	
XF DATE		LAND DATE	04/08/2024 MLU
INC DATE		AG DATE	

NASSAU COUNTY PROPERTY — VALUATION SUMMARY

VALUATION BY	STANDARD
Tax Group: 5	Tax Dist:
BUILDING MARKET VALUE	1,291,377
TOTAL MARKET OB/XF VALUE	72,257
TOTAL LAND VALUE - MARKET	750,000
TOTAL MARKET VALUE	2,113,634
SOH/AGL Deduction	0
ASSESSED VALUE	2,113,634
TOTAL EXEMPTION VALUE	0
BASE TAXABLE VALUE	2,113,634
TOTAL JUST VALUE	2,113,634
NCON VALUE	0
INCOME VALUE	
PREVIOUS YEAR MKT VALUE	1,877,568

PERMIT NUM	DESCRIPTION	AMT	ISSUED
B23416	REMODEL	11,934	03/01/2010
R045990	REPAIR/RRF	1,000	04/01/2004
7499	NEW CONSTR	216,500	08/30/1991

SALES DATA

OFF RECORD Number	DATE	TYPE INST	Q U	V I	RSN CD	SALE PRICE
2641/903	5/19/2023	WD	Q	I	01	2,650,000
GRANTOR: THIAVILLE CHARLES M						
GRANTEE: LAGASSE MARTHA SUE						
2593/0172	9/22/2022	WD	Q	I	01	2,395,000
GRANTOR: STAFFORD REBECCA A &						
GRANTEE: THIAVILLE CHARLES M						

BUILDING NOTES

BUILDING DIMENSIONS

BAS=[YR=1993] W2 N9 UOP=[YR=2007] N5 W21 N20 E21 N5 W21 STR=[YR=2007] N4 W8 S4 E8$ W19BAS=[YR=2007] U5 L2 L4 U4 W7 D4 L4 D5 L2 S5 E19N5$ S27 E18 S3 E22$ W22 N3 W18 N22 W19 S16 W2 S13 E2 S5 W2 S13 E2 S13 UOP=[YR=2007] W3 S12E3 FGR=[YR=1993] S13 E1 S9W1S13 E22 N35 UOP=[YR=2007] N12 W6 S12E6 $ W22 $ E4 N12 W4$ E4 S12 E12 N12 E7 FOP=[YR=1993] E11 N8 W11 S8 $ N8 E11 S8 E25 N9 E2 N17 $ PTR= E15 FUS=[YR=1993] E2 N5 E17 N2 E12 S18 W15 S4 W4S3 W10 N5 W2 N13 $W15 $.

EXTRA FEATURES

LN	OB/XF CODE	DESCRIPTION	BLD	CAP	L	W	UNITS	UT	Adj R	ADJ UNIT PRICE	ORIG COND	YEAR ON	YEAR ACTUAL	Q	% COND	OB/XF MKT VALUE	NOTES
1	0504	FP-ELECTRI	0	0	0	0	2.00	UT	2,000.00	2,000.00	100	1992	1992	3	72	2,880	
2	0855	CONC PAVER	0	0	0	0	1,993.00	SF	10.00	10.00	100	2012	2012	3	93	18,535	
3	0855	CONC PAVER	0	0	0	0	771.00	SF	10.00	10.00	100	2012	2012	3	93	7,170	
4	0861	POOL GUNIT	0	0	0	0	300.00	SF	85.00	85.00	100	2002	2002	3	29	7,395	
6	0855	CONC PAVER	0	0	0	0	728.00	SF	10.00	10.00	100	2002	2002	3	82	5,970	
7	0911	SCRN RM A	0	0	0	0	1,146.00	SF	17.50	17.50	100	2018	2018	3	82	16,445	
8	0600	SUMMER KIT	0	0	0	0	1.00	UT	5,000.00	5,000.00	100	2002	2002	3	20	1,000	
9	0500	FP-PRE FAB	0	0	0	0	1.00	UT	3,500.00	3,500.00	100	2002	2002	3	86	3,010	
10	0855	CONC PAVER	0	0	0	0	1,392.00	SF	7.00	7.00	100	2018	2018	3	97	9,452	
11	0871	POOL HTR R	0	0	0	0	1.00	UT	2,000.00	2,000.00	100	2024	2002		20	400	

TOTAL OB/XF 72,257

LAND DESCRIPTION

LN	USE CODE	CLS	LAND USE DESCRIPTION	CAP	RD	LOC ZONE	FRONT	DEPTH	TOT LND UTS	UNIT TYPE	DT	DPTH FACT	% COND	TOT ADJ	UNIT PRICE	ADJ UNIT PRICE	LAND VALUE	OTHER ADJUSTMENTS AND NOTES	YEAR	DENSITY	DECL	FRZ	YR	CONSRV
1	000140	C	SFR GOLF A	0		PUD	0.00	0.00	1.00	LT		1.00	1.00	1.00	750,000.00	750,000.00	750,000							

REVIEW DATE 02/20/2024 BY TWA Total Acres: 0.00 Total Land Value: 750,000 Market: 0 Agricultural: 0 Common: 750,000 PRINTED 08/06/2024 BY SYS