LOT 22
OAK POINT @ LONG POINT PB5/187

MAUDLIN JOHN & ELLEN
102 RED SKY COURT
LAKE MARY, FL 32746

2024

03-6N-29-00OP-0022-0000

NASSAU COUNTY PROPERTY

BUILDING CHARACTERISTICS

ELEMENT	CD	CONSTRUCTION
Exterior Wall	12	CEDAR 100
Roof Structur	08	IRREGULAR 100
Roof Cover	11	SLATE 100
Interior Wall	05	DRYWALL 100
Interior Floo	14	CARPET 60
Interior Floo	12	HARDWOOD 40
Air Condition	03	CENTRAL 100
Heating Type	04	AIR DUCTED 100
Bedrooms		4 100
Bathrooms		3.5 100
Frame	02	WOOD FRAME 100
Stories	3.	3. 100
Units		0 100
Quality	04	Quality Level 04
DOR CODE	0100	SINGLE FAMILY
MAP NUM		MKT AREA 10
NEIGHBORHOOD/LOC	10007.00	

AREA TYPE	TOTAL GROSS AREA	PCT OF BASE	TOT ADJ AREA	SUBAREA MARKET VALUE
BAS	1,403	100	1,403	276,578
FGR	594	55	327	64,463
FOP	16	30	5	986
FOP	403	30	121	23,853
FSP	205	40	82	16,165
FUS	164	100	164	32,330
FUS	1,445	100	1,445	284,858
UOP	12	20	2	395
UOP	21	20	4	789
UOP	24	20	5	986
TOTALS	4,433		3,587	707,119

MARKET ADJUSTMENTS

TYPE	MDL	EFF. AREA	TOT ADJ PTS	EFF. BASE RATE	REPL. COST NEW	AYB	EYB	ECON	FNCT		NORM	% COND
0500	11	3,587	148.5000	222.75	799,004	2000	2000	0	0	0	11.50	88.50

1 SFR CUST – 0% - 2024 Heated Area: 3012 HX Base Yr

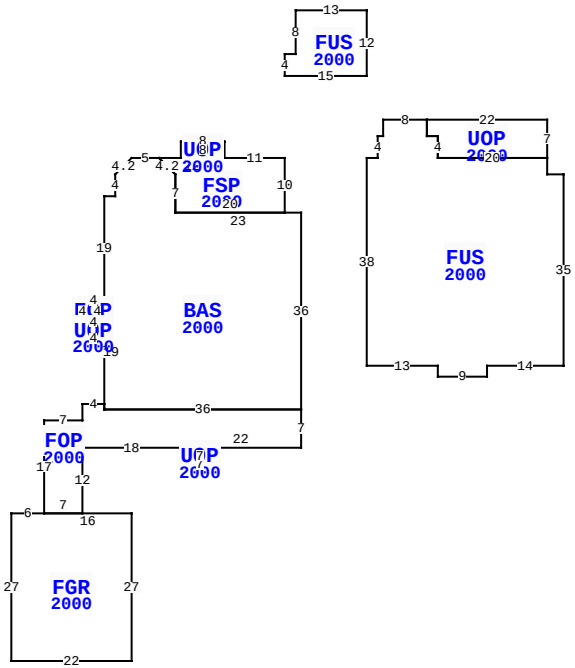

** This building has 11 Sub-Areas

6 OAK POINT DR, FERNANDINA BEACH

BLD DATE		LGL DATE	
XF DATE		LAND DATE	04/08/2024 MLU
INC DATE		AG DATE	

VALUATION SUMMARY

VALUATION BY	STANDARD
Tax Group: 5	Tax Dist:
BUILDING MARKET VALUE	707,119
TOTAL MARKET OB/XF VALUE	6,060
TOTAL LAND VALUE - MARKET	550,000
TOTAL MARKET VALUE	1,263,179
SOH/AGL Deduction	0
ASSESSED VALUE	1,263,179
TOTAL EXEMPTION VALUE	0
BASE TAXABLE VALUE	1,263,179
TOTAL JUST VALUE	1,263,179
NCON VALUE	0
INCOME VALUE	
PREVIOUS YEAR MKT VALUE	1,131,681

PERMIT NUM	DESCRIPTION	AMT	ISSUED
B9906021	NEW CONSTR	220,000	04/01/1999

SALES DATA

OFF RECORD Number	DATE	TYPE INST	Q / U	V / I	RSN CD	SALE PRICE
2672/327	10/06/2023	WD	Q	I	01	1,550,000
GRANTOR: SMITH BARBARA A & ROS						
GRANTEE: MAUDLIN JOHN & ELLE						
2496/0387	9/09/2021	TD	Q	I	02	1,010,000
GRANTOR: SCOTT KEITH & SUSIE R						
GRANTEE: SMITH BARBARA A & R						

BUILDING NOTES

BUILDING DIMENSIONS

FSP=[YR=2000] W11 UOP=[YR=2000] N3 W8 S3 E8$ W12
BAS=[YR=2000] W5 D3 L3 S4 W2 S19 FOP=[YR=2000] W4 S4
UOP=[YR=2000] S3 E4 N3 W4$ E4 N4$ S19 FOP=[YR=2000] W4 S3 W7
S17 FGR=[YR=2000] W6 S27 E22 N27 W16$ E7 N12 E18
UOP=[YR=2000] S3 E7 N3 W7$ E22 N7 W36 N1$ S1 E36 N36 W23 N7
L3 U3 $ D3 R3 S7 E20 N10$ PTR= E15 FUS=[YR=2000] E2 N4 E1
N3 E8 UOP=[YR=2000] E22 S7 W20 N4 W2 N3$ S3 E2 S4 E20 S3 E3
S35 W14 S2 W9 N2 W13 N38$ W15$ PTR=N15 FUS=[YR=2000] N4 E2 N8
E13 S12 W15$ S15$.

EXTRA FEATURES

LN	OB/XF CODE	DESCRIPTION	BLD	CAP	L	W	UNITS	UT	Adj R	ADJ UNIT PRICE	ORIG COND	YEAR ON	YEAR ACTUAL	Q	% COND	OB/XF MKT VALUE	NOTES
1	0504	FP-ELECTRI	0	0	0	0	1.00	UT	2,000.00	2,000.00	100	2000	2000	3	84	1,680	
2	0812	CONCRETE C	0	0	0	0	1,181.00	SF	4.00	4.00	100	2000	2000	3	79	3,732	
3	0810	CONCRETE A	0	0	0	0	71.00	SF	6.50	6.50	100	2018	2018	3	97	448	
4	1242	WD DECK A	0	0	10	10	100.00	SF	10.00	10.00	100	2000	2000	3	20	200	

LAND DESCRIPTION

TOTAL OB/XF 6,060

LN	USE CODE	CLS	LAND USE DESCRIPTION	CAP	RD	LOC ZONE	FRONT	DEPTH	TOT LND UTS	UNIT TYPE	DT	DPTH FACT	% COND	TOT ADJ	UNIT PRICE	ADJ UNIT PRICE	LAND VALUE	OTHER ADJUSTMENTS AND NOTES	YEAR	DENSITY	DECL	FRZ	YR	CONSRV
1	000133	C	SFR LAKE	0		PUD	0.00	0.00	1.00	LT		1.00	1.00	1.00	550,000.00	550,000.00	550,000							

REVIEW DATE 05/07/2019 BY DJ Total Acres: 0.00 Total Land Value: 550,000 Market: 0 Agricultural: 0 Common: 550,000 PRINTED 08/06/2024 BY SYS