LOTS 20 & 19 IN OR 935/1685 &
OR 985/1909 (EX PT IN
OR 1933/1999 & ESMT)

LESHER MARY D
16 OAK POINT DR
FERNANDINA BEACH, FL 32034-6429

2024

03-6N-29-00OP-0020-0000

BUILDING CHARACTERISTICS

ELEMENT	CD	CONSTRUCTION
Exterior Wall	12	CEDAR 80
Exterior Wall	10	ABOVE AVG 20
Roof Structur	08	IRREGULAR 100
Roof Cover	03	COMP SHNGL 100
Interior Wall	05	DRYWALL 100
Interior Floo	14	CARPET 70
Interior Floo	11	CLAY TILE 30
Air Condition	03	CENTRAL 100
Heating Type	04	AIR DUCTED 100
Bedrooms		3 100
Bathrooms		3 100
Frame	02	WOOD FRAME 100
Stories	2.	2. 100
Units		0 100
Occupancy	00	NONE 100
Quality	04	Quality Level 04
DOR CODE	0100	SINGLE FAMILY
MAP NUM		MKT AREA 10
NEIGHBORHOOD/LOC	10007.00	

AREA TYPE	TOTAL GROSS AREA	PCT OF BASE	TOT ADJ AREA	SUBAREA MARKET VALUE
BAS	1,589	100	1,589	232,099
FGR	572	55	315	46,011
FOP	72	30	22	3,214
FOP	161	30	48	7,011
FOP	190	30	57	8,326
FSP	250	40	100	14,607
FUS	169	100	169	24,685
FUS	1,192	100	1,192	174,111
UOP	21	20	4	584
UOP	39	20	8	1,169
TOTALS	4,311		3,515	513,422

MARKET ADJUSTMENTS

TYPE	MDL	EFF. AREA	TOT ADJ PTS	EFF. BASE RATE	REPL. COST NEW	AYB	EYB	ECON	FNCT		NORM	% COND
0500	01	3,515	109.9035	164.86	579,483	2000	2000	0	0	0	11.40	88.60

1 SFR CUST – 100% - 2001 Heated Area: 2950 HX Base Yr 2001

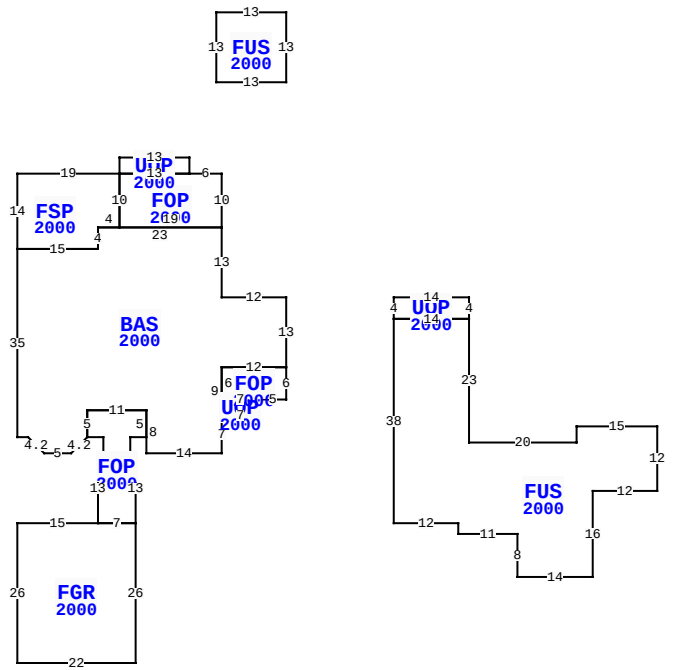

** This building has 11 Sub-Areas

16 OAK POINT DR, FERNANDINA BEACH

BLD DATE		LGL DATE	
XF DATE		LAND DATE	04/08/2024 MLU
INC DATE		AG DATE	

NASSAU COUNTY PROPERTY

PAGE 1 of 1 5

VALUATION SUMMARY

VALUATION BY		STANDARD
Tax Group: 5	Tax Dist:	
BUILDING MARKET VALUE		513,422
TOTAL MARKET OB/XF VALUE		7,274
TOTAL LAND VALUE - MARKET		825,000
TOTAL MARKET VALUE		1,345,696
SOH/AGL Deduction		624,812
ASSESSED VALUE		720,884
TOTAL EXEMPTION VALUE	HX HB WX	55,000
BASE TAXABLE VALUE		665,884
TOTAL JUST VALUE		1,345,696
NCON VALUE		0
INCOME VALUE		
PREVIOUS YEAR MKT VALUE		1,172,871

PERMIT NUM	DESCRIPTION	AMT	ISSUED
B9905903	NEW CONSTR	220,000	03/01/1999

SALES DATA

OFF RECORD Number	DATE	TYPE INST	Q U	V I	RSN CD	SALE PRICE
0935/1685	6/08/2000	WD	Q	I		459,000
GRANTOR: R G RAMSEY CONSTRUCTI						
GRANTEE: LESHER BRADLEY C &						
0875/1722	3/24/1999	WD	U	V	19	65,000
GRANTOR: CURY & SALTMARSH DEVE						
GRANTEE: R G RAMSEY CONSTRUC						

EXTRA FEATURES

L N	OB/XF CODE	DESCRIPTION	BLD	CAP	L	W	UNITS	UT	Adj R	ADJ UNIT PRICE	ORIG COND	YEAR ON	YEAR ACTUAL	Q	% COND	OB/XF MKT VALUE	NOTES
1	0504	FP-ELECTRI	0	100	0	0	1.00	UT	2,000.00	2,000.00	100	2000	2000	3	84	1,680	
2	0811	CONCRETE B	0	100	0	0	886.00	SF	5.20	5.20	100	2000	2000	3	79	3,640	
3	0810	CONCRETE A	0	100	0	0	150.00	SF	6.50	6.50	100	2000	2000	3	79	770	
4	0300	BOAT DCK W	0	100	10	10	100.00	SF	40.00	40.00	100	2000	2000	3	28	1,120	
5	1242	WD DECK A	0	100	8	4	32.00	SF	10.00	10.00	100	2000	2000	3	20	64	

BUILDING NOTES

BUILDING DIMENSIONS

BAS=[YR=2000] W12 N13 FOP=[YR=2000] N10 W6 UOP=[YR=2000] N3 W13 S3 E13$ W13 FSP=[YR=2000] W19 S14 E15 N4 E4 N10$ S10 E19$ W23 S4 W15 S35 E2 R3 D3 E5 U3 R3 FOP=[YR=2000] E3 S3 W1 S13 FGR=[YR=2000] W15 S26 E22 N26 W7 $ E7 N13 W1 N3 E3 N5 W11 S5$ N5 E11 S8 E14 N7 UOP=[YR=2000] E7 N3 FOP=[YR=2000] E5 N6 W12 S6 E7$ W7 S3 $ N9 E12 N13$ PTR= E20 UOP=[YR=2000] E14 S4 FUS=[YR=2000] S23 E20 N3 E15 S12 W12 S16 W14 N8 W11 N2 W12 N38 E14 $ W14 N4 $ W20 $ PTR= N40 FUS=[YR=2000] N13 W13 S13 E13 $ S40$.

LAND DESCRIPTION

TOTAL OB/XF 7,274

L N	USE CODE	CLS	LAND USE DESCRIPTION	CAP	R D	LOC ZONE	FRONT	DEPTH	TOT LND UTS	UNIT TYPE	D T	DPTH FACT	% COND	TOT ADJ	UNIT PRICE	ADJ UNIT PRICE	LAND VALUE	OTHER ADJUSTMENTS AND NOTES	YEAR	DENSITY	DECL	FRZ	YR	CONSRV
1	000133	C	SFR LAKE	100		PUD	0.00	0.00	1.00	LT		1.00	1.00	1.00	550,000.00	550,000.00	550,000							
2	000133	C	SFR LAKE	100		PUD	0.00	0.00	0.50	LT		1.00	1.00	1.00	550,000.00	550,000.00	275,000							

REVIEW DATE 05/12/2019 BY KBA Total Acres: 0.00 Total Land Value: 825,000 Market: 0 Agricultural: 0 Common: 825,000 PRINTED 08/06/2024 BY SYS