LOT 92
IN OR 2474/1982
LONG POINT #1 PB 5/85-89

GOWER WILLIAM H & ANNE T
24 MARSH POINT ROAD
FERNANDINA BEACH, FL 32034

2024

03-6N-29-00LP-0092-0000

BUILDING CHARACTERISTICS

ELEMENT	CD	CONSTRUCTION
Exterior Wall	18	CEMENT BRK 100
Roof Structur	04	WOOD TRUSS 100
Roof Cover	13	STAND SEAM 100
Interior Wall	05	DRYWALL 100
Interior Floo	12	HARDWOOD 70
Interior Floo	14	CARPET 30
Air Condition	03	CENTRAL 100
Heating Type	04	AIR DUCTED 100
Bedrooms		4 100
Bathrooms		4 100
Frame	04	REIN CONC 100
Stories	2.	2. 100
Units		0 100
Quality	03	Quality Level 03
DOR CODE	0100	SINGLE FAMILY
MAP NUM		MKT AREA 10
NEIGHBORHOOD/LOC	10007.00	

AREA TYPE	TOTAL GROSS AREA	PCT OF BASE	TOT ADJ AREA	SUBAREA MARKET VALUE
BAL	27	15	4	2,192
BAS	156	100	156	85,454
BAS	5,339	100	5,339	2,924,604
FGR	1,088	55	598	327,573
FOP	717	30	215	117,773
FSP	616	40	246	134,754
FST	30	55	16	8,764
FST	209	55	115	62,995
FUS	1,244	100	1,244	681,440
FUS	2,740	100	2,740	1,500,921
TOTALS	13,041		10,906	5,974,102

MARKET ADJUSTMENTS

TYPE	MDL	EFF. AREA	TOT ADJ PTS	EFF. BASE RATE	REPL. COST NEW	AYB	EYB	ECON	FNCT		NORM	% COND
0500	22	10,906	373.5903	560.39	6,111,613	2020	2020	0	0	0	2.25	97.75

3 SFR CUST – 100% - 2021 Heated Area: 9479 HX Base Yr 2021

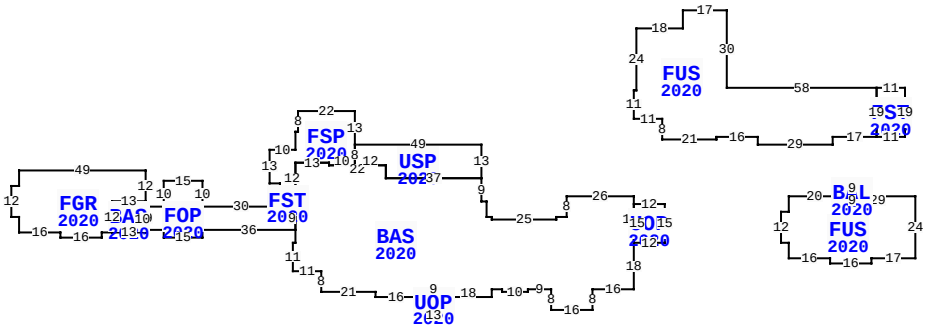

** This building has 13 Sub-Areas

24 MARSH POINT RD, FERNANDINA BEACH

BLD DATE	02/15/2008 DJ	LGL DATE	
XF DATE		LAND DATE	04/08/2024 MLU
INC DATE		AG DATE	

EXTRA FEATURES

LN	OB/XF CODE	DESCRIPTION	BLD	CAP	L	W	UNITS	UT	Adj R	ADJ UNIT PRICE	ORIG COND	YEAR ON	YEAR ACTUAL	Q	% COND	OB/XF MKT VALUE	NOTES
1	0410	ELEVATOR	0	100	0	0	1.00	UT	10,000.00	10,000.00	100	2020	2020	3	100	10,000	
2	0855	CONC PAVER	0	100	0	0	7,241.00	SF	10.00	10.00	100	2020	2020	3	99	71,686	
3	0857	SANDSTONE/	0	100	0	0	440.00	SF	16.00	16.00	100	2020	2020	3	100	7,040	
4	0861	POOL GUNIT	0	100	0	0	500.00	SF	85.00	85.00	100	2020	2020	3	93	39,525	
5	0855	CONC PAVER	0	100	0	0	882.00	SF	10.00	10.00	100	2020	2020	3	99	8,732	
6	0300	BOAT DCK W	0	100	0	0	644.00	SF	40.00	40.00	100	2020	2020	3	93	23,957	

NASSAU COUNTY PROPERTY

PAGE 1 of 1 5

VALUATION SUMMARY

VALUATION BY		STANDARD
Tax Group: 5	Tax Dist:	
BUILDING MARKET VALUE		5,974,102
TOTAL MARKET OB/XF VALUE		160,940
TOTAL LAND VALUE - MARKET		1,700,000
TOTAL MARKET VALUE		7,835,042
SOH/AGL Deduction		1,942,842
ASSESSED VALUE		5,892,200
TOTAL EXEMPTION VALUE	HX HB	50,000
BASE TAXABLE VALUE		5,842,200
TOTAL JUST VALUE		7,835,042
NCON VALUE		0
INCOME VALUE		
PREVIOUS YEAR MKT VALUE		7,381,242

PERMIT NUM	DESCRIPTION	AMT	ISSUED
19013049	CO ISSUED	0	12/30/2019
17087616	SWIM POOL	60,000	10/04/2017
B1706893	NEW CONSTR	1,038,303	08/02/2017
B1632716	DEMOLITION	0	07/01/2016

SALES DATA

OFF RECORD Number	DATE	TYPE INST	Q / U	V / I	RSN CD	SALE PRICE
2474/1982	6/29/2021	QC	U	I	11	1,000,000
GRANTOR: GOWER WILLIAM H & ANN						
GRANTEE: GOWER WILLIAM H & A						
2054/0379	6/13/2016	WD	U	I	11	100
GRANTOR: NOONAN JOHN R ET AL						
GRANTEE: GOWER WILLIAM H						

BUILDING NOTES

BUILDING DIMENSIONS

BAS=[YR=2020] W26 S8 W4 S1 W25 N1 W2 N6 W2 N9 USP=[YR=2020] N13W49 FSP=[YR=2020] N13 W22 S8W1 S7 W10 S13 E4 S4 FST=[YR=2020] S5 FOP=[YR=2020] W30 N10 W15 S10 W7 BAS=[YR=2020] N2 FGR=[YR=2020] N12 W49 S6 W3 S12 E3 S6 E16 S2 E16 N2 E4 N12 E13 $ W13 S12 E13 N10 $ S9 E7 S3 E15 N3 E36 N9 W6 $ E6 N5 W6 $ E6 N12 E13 S1 E10 N8 $ S8 E12 S5 E37$ W37 N5 W22 N1 W13 S31 W1 S11 E11 S8 E21 S2 E16 UOP=[YR=2020] S7 E13 N7 W2 N3 W9 S3 W2 $ E2 N3 E9 S3 E18 N3 E4 S1 E10 N1 E9 S8 E16 N8 E16 N18 UOP=[YR=2020] E12 N15 W12 S15 $ N18 $ PTR= N30 FUS=[YR=2020] N11 E1 N24 E18 N7 E17 S30 E58 FST=[YR=2020] E11 S19 W11 N19 $S19 W17 S3 W29 N3 W16 S1 W21 N8 W11 $ S30$ PTR= E60 FUS=[YR=2020] E20 BAL=[YR=2020] N3 E9 S3 W9 $ E29

LAND DESCRIPTION

TOTAL OB/XF 160,940

LN	USE CODE	CLS	LAND USE DESCRIPTION	CAP	RD	LOC ZONE	FRONT	DEPTH	TOT LND UTS	UNIT TYPE	DT	DPTH FACT	% COND	TOT ADJ	UNIT PRICE	ADJ UNIT PRICE	LAND VALUE	OTHER ADJUSTMENTS AND NOTES	YEAR	DENSITY	DECL	FRZ	YR	CONSRV
1	000116	C	SFR MARSH	100		PUD	0.00	0.00	1.00	LT		1.00	1.00	1.00	1,700,000.00	1,700,000.00	1,700,000							

REVIEW DATE 02/07/2020 BY DJ Total Acres: 0.00 Total Land Value: 1,700,000 Market: 0 Agricultural: 0 Common: 1,700,000 PRINTED 08/06/2024 BY SYS