LOT 88
IN OR 2128/1611
LONG POINT #1 PB 5/85-89

16 MARSH POINT LLC
20725 SW 46TH AVE
NEWBERRY, FL 32669

**2024**

**03-6N-29-00LP-0088-0000**

## NASSAU COUNTY PROPERTY



### BUILDING CHARACTERISTICS

| ELEMENT | CD | CONSTRUCTION |
|---|---|---|
| Exterior Wall | 17 | CB STUCCO 60 |
| Exterior Wall | 20 | FACE BRICK 40 |
| Roof Structur | 03 | GABLE/HIP 100 |
| Roof Cover | 07 | CONC TILE 100 |
| Interior Wall | 05 | DRYWALL 100 |
| Interior Floo | 12 | HARDWOOD 70 |
| Interior Floo | 11 | CLAY TILE 30 |
| Air Condition | 03 | CENTRAL 100 |
| Heating Type | 04 | AIR DUCTED 100 |
| Bedrooms | | 4 100 |
| Bathrooms | | 5 100 |
| Frame | 04 | REIN CONC 100 |
| Stories | 3.5 | 3.5 100 |
| Units | | 0 100 |
| Quality | 04 | Quality Level 04 |
| DOR CODE | 0100 | SINGLE FAMILY |
| MAP NUM | | MKT AREA 10 |
| NEIGHBORHOOD/LOC | 10007.00 | |

| AREA TYPE | TOTAL GROSS AREA | PCT OF BASE | TOT ADJ AREA | SUBAREA MARKET VALUE |
|---|---|---|---|---|
| BAL | 24 | 15 | 4 | 870 |
| BAL | 24 | 15 | 4 | 870 |
| BAL | 180 | 15 | 27 | 5,875 |
| BAS | 630 | 100 | 630 | 137,082 |
| DCK | 462 | 10 | 46 | 10,010 |
| FAT | 486 | 20 | 97 | 21,106 |
| FGR | 1,859 | 55 | 1,022 | 222,379 |
| FOP | 36 | 30 | 11 | 2,393 |
| FOP | 210 | 30 | 63 | 13,709 |
| FOP | 309 | 30 | 93 | 20,236 |
| TOTALS | 10,928 | | 7,256 | 1,578,844 |

### MARKET ADJUSTMENTS

| TYPE | MDL | EFF. AREA | TOT ADJ PTS | EFF. BASE RATE | REPL. COST NEW | AYB | EYB | ECON | FNCT | | NORM | % COND |
|---|---|---|---|---|---|---|---|---|---|---|---|---|
| 0500 | 11 | 7,256 | 147.7212 | 221.58 | 1,607,784 | 2020 | 2020 | 0 | 0 | 0 | 1.80 | 98.20 |

1 SFR CUST – 0% - 0 Heated Area: 5364 HX Base Yr

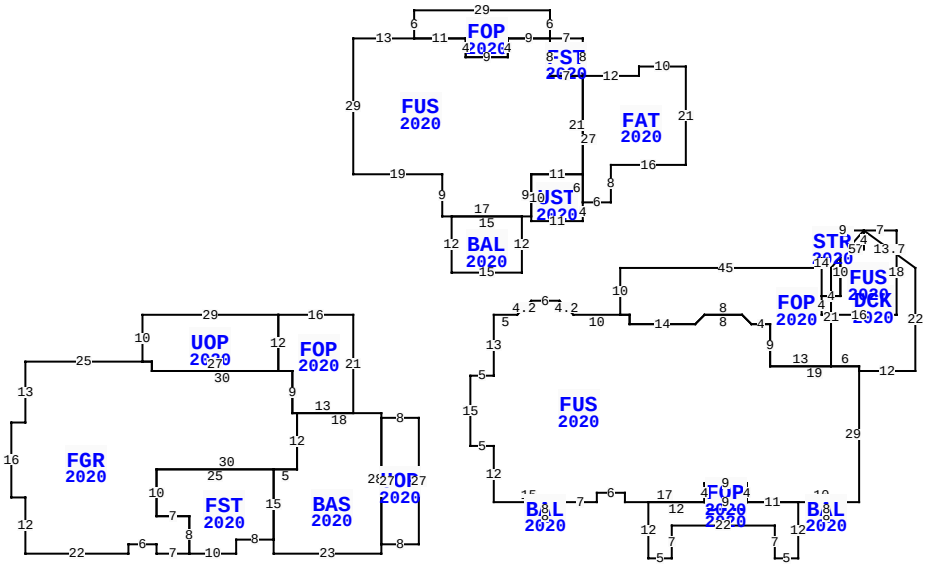


** This building has 21 Sub-Areas

MARSH POINT RD, FERNANDINA BEACH

| | | | |
|---|---|---|---|
| BLD DATE | | LGL DATE | |
| XF DATE | | LAND DATE | 04/08/2024 MLU |
| INC DATE | | AG DATE | |

### VALUATION SUMMARY

| | |
|---|---|
| VALUATION BY | STANDARD |
| Tax Group: 5 | Tax Dist: |
| BUILDING MARKET VALUE | 1,578,844 |
| TOTAL MARKET OB/XF VALUE | 109,309 |
| TOTAL LAND VALUE - MARKET | 1,050,000 |
| TOTAL MARKET VALUE | 2,738,153 |
| SOH/AGL Deduction | 495,074 |
| ASSESSED VALUE | 2,243,079 |
| TOTAL EXEMPTION VALUE | 0 |
| BASE TAXABLE VALUE | 2,243,079 |
| TOTAL JUST VALUE | 2,738,153 |
| NCON VALUE | 0 |
| INCOME VALUE | |
| PREVIOUS YEAR MKT VALUE | 2,469,404 |

| PERMIT NUM | DESCRIPTION | AMT | ISSUED |
|---|---|---|---|
| B1804106 | NEW CONSTR | 774,467 | 04/24/2018 |

### SALES DATA

| OFF RECORD Number | DATE | TYPE INST | Q / U | V / I | RSN CD | SALE PRICE |
|---|---|---|---|---|---|---|
| 2128/1611 | 6/23/2017 | WD | Q | V | 01 | 645,000 |
| GRANTOR: PHILIPP CHERYL E | | | | | | |
| GRANTEE: 16 MARSH POINT LLC | | | | | | |
| 0941/0558 | 7/18/2000 | WD | Q | V | | 850,000 |
| GRANTOR: HOMER EDWARD J & TAMA | | | | | | |
| GRANTEE: PHILIPP CHERYL E | | | | | | |

### BUILDING NOTES

### EXTRA FEATURES

| L N | OB/XF CODE | DESCRIPTION | BLD | CAP | L | W | UNITS | UT | Adj R | ADJ UNIT PRICE | ORIG COND | YEAR ON | YEAR ACTUAL | Q | % COND | OB/XF MKT VALUE | NOTES |
|---|---|---|---|---|---|---|---|---|---|---|---|---|---|---|---|---|---|
| 1 | 0409 | ELEVATOR R | 0 | 0 | 0 | 0 | 1.00 | UT | 12,240.00 | 12,240.00 | 100 | 2020 | 2020 | 3 | 100 | 12,240 | |
| 2 | 0500 | FP-PRE FAB | 0 | 0 | 0 | 0 | 2.00 | UT | 3,500.00 | 3,500.00 | 100 | 2020 | 2020 | 3 | 99 | 6,930 | |
| 3 | 0855 | CONC PAVER | 0 | 0 | 0 | 0 | 4,356.00 | SF | 10.00 | 10.00 | 100 | 2020 | 2020 | 3 | 99 | 43,124 | |
| 4 | 0300 | BOAT DCK W | 0 | 0 | 0 | 0 | 1,125.00 | SF | 40.00 | 40.00 | 100 | 2020 | 2020 | 3 | 93 | 41,850 | |
| 5 | 0303 | FLT DOCK W | 0 | 0 | 8 | 16 | 128.00 | SF | 26.00 | 26.00 | 100 | 2020 | 2020 | 3 | 93 | 3,095 | |
| 6 | 0310 | AL GANG WY | 0 | 0 | 0 | 0 | 20.00 | LF | 115.00 | 115.00 | 100 | 2020 | 2020 | 3 | 90 | 2,070 | |

### BUILDING DIMENSIONS

FOP=[YR=2020] W16 UOP=[YR=2020] W29 S10 FGR=[YR=2020] W25 S13 W3 S16 E3 S12 E22 N2 E6 S2 E7 FST=[YR=2020] E10 N 3 E8 BAS=[YR=2020] S3 E23 N2 UOP=[YR=2020] E8 N27 W8 S27 $ N28 W18 S12 W5 S15$ N15 W25 S10 E7S8 $ N8 W7 N10 E30 N12 W1 N9 W30 N2 W 2 $ E2 S2 E27 N12 $ S12 E3 S9 E13 N21 $ PTR= E30 FUS=[YR=2020] E5 U3 R3 E6 D3 R3 E10 FOP=[YR=2020] N10 E45 DCK=[YR=2020] U8 R7 D8 R11 S22 W12 N1 W6N21 $ S21 W 13 N9 W4 U2 L2 W8 D2 L2 W14 N2 W2 $ E2 S2 E14 U2 R2 E8 D2 R2 E4 S9 E19 S29 W3 BAL=[YR=2020] S3W8 N3 E8 $ W10 STR=[YR=2020] S12 W5N7W22S7W5N12E12FOP=[YR=2020] E 9N4W9S4$N4E9S4E11$W11N4W9S4W17 N2W6S2W7BAL=[YR=2020] S3W8 N3 E8 $ W15 N12 W5 N15 E5 N13 $ W30 $ PTR=N30 FUS=[YR=2020]

### LAND DESCRIPTION

TOTAL OB/XF 109,309

| L N | USE CODE | CLS | LAND USE DESCRIPTION | CAP | R D | LOC ZONE | FRONT | DEPTH | TOT LND UTS | UNIT TYPE | D T | DPTH FACT | % COND | TOT ADJ | UNIT PRICE | ADJ UNIT PRICE | LAND VALUE | OTHER ADJUSTMENTS AND NOTES | YEAR | DENSITY | DECL | FRZ | YR | CONSRV |
|---|---|---|---|---|---|---|---|---|---|---|---|---|---|---|---|---|---|---|---|---|---|---|---|---|
| 1 | 000116 | C | SFR MARSH | 0 | | PUD | 0.00 | 0.00 | 1.00 | LT | | 1.00 | 1.00 | 1.00 | 1,050,000.00 | 1,050,000.00 | 1,050,000 | | | | | | | |

REVIEW DATE 03/15/2021 BY RK Total Acres: 0.00 Total Land Value: 1,050,000 Market: 0 Agricultural: 0 Common: 1,050,000 PRINTED 08/06/2024 BY SYS