LOT 77
IN OR 1676/1308
LONG POINT #1 PB 5/85-89

LEATHERY DONALD L TRUSTEE
35 SALT MARSH DRIVE
FERNANDINA BEACH, FL 32034

2024

03-6N-29-00LP-0077-0000

BUILDING CHARACTERISTICS

ELEMENT	CD	CONSTRUCTION
Exterior Wall	16	WD FR STUC 100
Roof Structur	08	IRREGULAR 100
Roof Cover	10	WD SHINGLE 100
Interior Wall	05	DRYWALL 100
Interior Floo	14	CARPET 60
Interior Floo	12	HARDWOOD 40
Air Condition	03	CENTRAL 100
Heating Type	04	AIR DUCTED 100
Bedrooms		4 100
Bathrooms		4.5 100
Frame	02	WOOD FRAME 100
Stories	2.	2. 100
Units		0 100
Quality	06	Quality Level 06
DOR CODE	0100	SINGLE FAMILY
MAP NUM		MKT AREA 10
NEIGHBORHOOD/LOC	10007.00	

AREA TYPE	TOTAL GROSS AREA	PCT OF BASE	TOT ADJ AREA	SUBAREA MARKET VALUE
BAS	2,759	100	2,759	872,414
BAS	221	100	221	69,882
BAS	551	100	551	174,230
BAS	104	100	104	32,886
BAS	132	100	132	41,739
FGR	816	55	449	141,977
FOP	144	30	43	13,597
FUS	1,776	100	1,776	561,583
UOP	70	20	14	4,427
UOP	523	20	105	33,201
TOTALS	7,096		6,154	1,945,937

MARKET ADJUSTMENTS

TYPE	MDL	EFF. AREA	TOT ADJ PTS	EFF. BASE RATE	REPL. COST NEW	AYB	EYB	ECON	FNCT		NORM	% COND
0500	12	6,154	231.6500	347.48	2,138,392	1990	2005	0	0	0	9.00	91.00

1 SFR CUST – 100% - 2001 Heated Area: 5543 HX Base Yr 2001

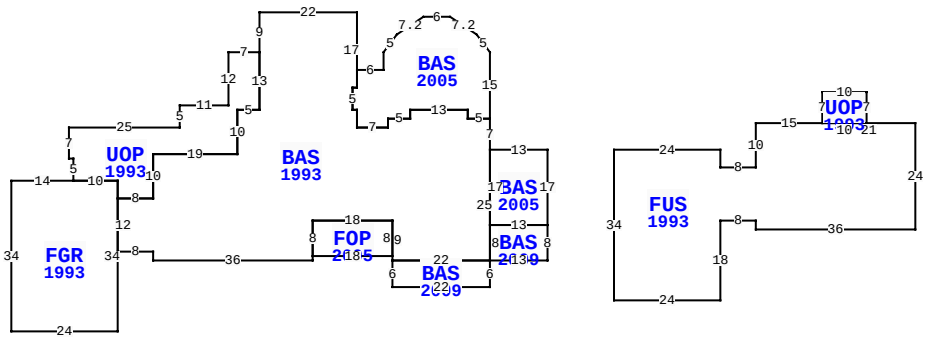

35 SALT MARSH DR, FERNANDINA BEACH

BLD DATE		LGL DATE	
XF DATE		LAND DATE	04/08/2024 MLU
INC DATE		AG DATE	

NASSAU COUNTY PROPERTY

PAGE 1 of 3 5

VALUATION SUMMARY

VALUATION BY		STANDARD
Tax Group: 5	Tax Dist:	
BUILDING MARKET VALUE		1,945,937
TOTAL MARKET OB/XF VALUE		117,451
TOTAL LAND VALUE - MARKET		1,400,000
TOTAL MARKET VALUE		3,463,388
SOH/AGL Deduction		2,066,673
ASSESSED VALUE		1,396,715
TOTAL EXEMPTION VALUE	HX HB	50,000
BASE TAXABLE VALUE		1,346,715
TOTAL JUST VALUE		3,463,388
NCON VALUE		0
INCOME VALUE		
PREVIOUS YEAR MKT VALUE		3,179,085

PERMIT NUM	DESCRIPTION	AMT	ISSUED
B25097	REPAIR/RRF	16,478	09/01/2011
G01610	GAS	395	03/01/2011
R11948	REPAIR/RRF	2,388	06/01/2009
B22235	ADDITION	28,000	01/01/2009
R0507715	REPAIR/RRF	70,000	06/01/2005
5585	NEW CONSTR	426,548	03/20/1989

SALES DATA

OFF RECORD Number	DATE	TYPE INST	Q / U	V / I	RSN CD	SALE PRICE
1676/1308	3/31/2010	WD	U	I	30	441,900
GRANTOR: LEATHERY DONALD L & A						
GRANTEE: LEATHERY DONALD L T						
0938/0221	6/26/2000	WD	U	I		1,550,000
GRANTOR: BISSELL HOWARD C & SA						
GRANTEE: LEATHERY DONALD L &						

BUILDING NOTES

BUILDING DIMENSIONS

BAS=[YR=2005] W13 BAS=[YR=1993] N7 BAS=[YR=2005] N15 U4 L3 U4 L6 W6 L6 D4 L3 D4 S4 W6 S4 W1 S5 E1 S4 E7 N2 E5 N2 E13 S2 E5$ W5 N2 W13 S2 W5 S2 W7 N4 W1 N5 E1 N17 W22 S9 UOP=[YR=1993] W7 S12 W11 S5 W25 S7 E1 S5 FGR=[YR=1993] W14 S34 E24 N34 W10$ E10 S4 E8 N10E19 N10 E5 N13$ S13 W5 S10 W19S10 W8 S12 E8 S2 E36 N1 FOP=[YR=2005] E18 N8 W18 S8$ N8 E18 S9 BAS=[YR=2009] S6 E22 N6 W22$ E22 BAS=[YR=2009] E13 N8 W13 S8$ N25$ S17 E13 N17$ PTR= E15 FUS=[YR=1993] E24 S4 E8 N10 E15 UOP=[YR=1993] N7 E10 S7 W10 $ E21 S24 W36 N2 W8 S18 W24 N34 $ W15 $.

EXTRA FEATURES

LN	OB/XF CODE	DESCRIPTION	BLD	CAP	L	W	UNITS	UT	Adj R	ADJ UNIT PRICE	ORIG COND	YEAR ON	YEAR ACTUAL	Q	% COND	OB/XF MKT VALUE	NOTES
1	0300	BOAT DCK W	0	100	227	4	908.00	SF	10.00	10.00	100	1990	1990	3	20	1,816	
2	0861	POOL GUNIT	0	100	28	14	392.00	SF	85.00	85.00	100	1990	1990	3	20	6,664	
3	0504	FP-ELECTRI	0	100	0	0	1.00	UT	2,000.00	2,000.00	100	1990	1990	3	68	1,360	
4	0504	FP-ELECTRI	0	100	0	0	1.00	UT	2,000.00	2,000.00	100	1990	1990	3	68	1,360	
5	0504	FP-ELECTRI	0	100	0	0	1.00	UT	2,000.00	2,000.00	100	1990	1990	3	68	1,360	
6	0845	KOOL DECK	0	100	0	0	908.00	SF	7.25	7.25	100	1990	1990	3	59.5	3,917	
7	0825	BRICK	0	100	0	0	109.00	SF	12.50	12.50	100	1990	1990	3	86	1,172	
8	1126	CB/STC 8"	0	100	0	0	174.00	SF	8.00	8.00	100	1990	1990	3	59.5	828	
9	1242	WD DECK A	0	100	33	6	198.00	SF	10.00	10.00	100	1990	1990	3	20	396	
10	1242	WD DECK A	0	100	26	4	104.00	SF	10.00	10.00	100	1990	1990	3	20	208	

TOTAL OB/XF 19,081

LAND DESCRIPTION

LN	USE CODE	CLS	LAND USE DESCRIPTION	CAP	RD	LOC ZONE	FRONT	DEPTH	TOT LND UTS	UNIT TYPE	DT	DPTH FACT	% COND	TOT ADJ	UNIT PRICE	ADJ UNIT PRICE	LAND VALUE	OTHER ADJUSTMENTS AND NOTES	YEAR	DENSITY	DECL	FRZ	YR	CONSRV
1	000116	C	SFR MARSH	100		PUD	0.00	0.00	1.00	LT		1.00	1.00	1.00	1,400,000.00	1,400,000.00	1,400,000							

REVIEW DATE 02/26/2020 BY DJA Total Acres: 0.00 Total Land Value: 1,400,000 Market: 0 Agricultural: 0 Common: 1,400,000 PRINTED 08/06/2024 BY SYS

LOT 77
IN OR 1676/1308
LONG POINT #1 PB 5/85-89

LEATHERY DONALD L TRUSTEE
35 SALT MARSH DRIVE
FERNANDINA BEACH, FL 32034

2024

03-6N-29-00LP-0077-0000

BUILDING CHARACTERISTICS

ELEMENT	CD	CONSTRUCTION

DOR CODE	0100	SINGLE FAMILY	
MAP NUM		MKT AREA	10
NEIGHBORHOOD/LOC	10007.00		

AREA TYPE	TOTAL GROSS AREA	PCT OF BASE	TOT ADJ AREA	SUBAREA MARKET VALUE
TOTALS				

MARKET ADJUSTMENTS

TYPE	MDL	EFF. AREA	TOT ADJ PTS	EFF. BASE RATE	REPL. COST NEW	AYB	EYB	ECON	FNCT		NORM	% COND

BLD DATE		LGL DATE	
XF DATE		LAND DATE	04/08/2024 MLU
INC DATE		AG DATE	

NASSAU COUNTY PROPERTY

PAGE 2 of 3 5

VALUATION SUMMARY

VALUATION BY		STANDARD
Tax Group: 5	Tax Dist:	
BUILDING MARKET VALUE		1,945,937
TOTAL MARKET OB/XF VALUE		117,451
TOTAL LAND VALUE - MARKET		1,400,000
TOTAL MARKET VALUE		3,463,388
SOH/AGL Deduction		2,066,673
ASSESSED VALUE		1,396,715
TOTAL EXEMPTION VALUE	HX HB	50,000
BASE TAXABLE VALUE		1,346,715
TOTAL JUST VALUE		3,463,388
NCON VALUE		0
INCOME VALUE		
PREVIOUS YEAR MKT VALUE		3,179,085

PERMIT NUM	DESCRIPTION	AMT	ISSUED

SALES DATA

OFF RECORD Number	DATE	TYPE INST	Q / U	V / I	RSN CD	SALE PRICE
1676/1308	3/31/2010	WD	U	I	30	441,900
GRANTOR: LEATHERY DONALD L & A						
GRANTEE: LEATHERY DONALD L T						
0938/0221	6/26/2000	WD	U	I		1,550,000
GRANTOR: BISSELL HOWARD C & SA						
GRANTEE: LEATHERY DONALD L &						

BUILDING NOTES

BUILDING DIMENSIONS

EXTRA FEATURES

LN	OB/XF CODE	DESCRIPTION	BLD	CAP	L	W	UNITS	UT	Adj R	ADJ UNIT PRICE	ORIG COND	YEAR ON	YEAR ACTUAL	Q	% COND	OB/XF MKT VALUE	NOTES
11	0303	FLT DOCK W	0	100	20	6	120.00	SF	13.00	13.00	100	1990	1990	3	20	312	
12	0811	CONCRETE B	0	100	0	0	564.00	SF	5.20	5.20	100	2005	2005	3	86	2,522	
13	0810	CONCRETE A	0	100	0	0	65.00	SF	6.50	6.50	100	2005	2005	3	86	363	
14	0825	BRICK	0	100	36	7	252.00	SF	12.50	12.50	100	2008	2008	3	97	3,056	
15	0855	CONC PAVER	0	100	0	0	8,525.00	SF	10.00	10.00	100	2008	2008	3	89	75,873	
16	1242	WD DECK A	0	100	0	0	48.00	SF	10.00	10.00	100	2005	2005	3	24	115	
17	1242	WD DECK A	0	100	4	5	20.00	SF	10.00	10.00	100	2009	2009	3	40	80	
18	0300	BOAT DCK W	0	100	43	3	129.00	SF	40.00	40.00	100	2009	2009	3	56	2,890	
19	0525	GAZEBO	0	100	0	0	1.00	UT	5,000.00	5,000.00	100	2009	2009	3	56	2,800	
20	1126	CB/STC 8"	0	100	4	5	20.00	SF	8.00	8.00	100	2009	2009	3	90	144	

TOTAL OB/XF 88,155

LAND DESCRIPTION

LN	USE CODE	CLS	LAND USE DESCRIPTION	CAP	RD	LOC ZONE	FRONT	DEPTH	TOT LND UTS	UNIT TYPE	DT	DPTH FACT	% COND	TOT ADJ	UNIT PRICE	ADJ UNIT PRICE	LAND VALUE	OTHER ADJUSTMENTS AND NOTES	YEAR	DENSITY	DECL	FRZ	YR	CONSRV

REVIEW DATE 02/26/2020 BY DJA Total Acres: 0.00 Total Land Value: 1,400,000 Market: 0 Agricultural: 0 Common: 1,400,000 PRINTED 08/06/2024 BY SYS

LOT 77
IN OR 1676/1308
LONG POINT #1 PB 5/85-89

LEATHERY DONALD L TRUSTEE
35 SALT MARSH DRIVE
FERNANDINA BEACH, FL 32034

2024

03-6N-29-00LP-0077-0000

NASSAU COUNTY PROPERTY

BUILDING CHARACTERISTICS

ELEMENT	CD	CONSTRUCTION

DOR CODE	0100	SINGLE FAMILY	
MAP NUM		MKT AREA	10
NEIGHBORHOOD/LOC	10007.00		

AREA TYPE	TOTAL GROSS AREA	PCT OF BASE	TOT ADJ AREA	SUBAREA MARKET VALUE
TOTALS				

MARKET ADJUSTMENTS

TYPE	MDL	EFF. AREA	TOT ADJ PTS	EFF. BASE RATE	REPL. COST NEW	AYB	EYB	ECON	FNCT		NORM	% COND

VALUATION SUMMARY

VALUATION BY		STANDARD
Tax Group: 5	Tax Dist:	
BUILDING MARKET VALUE		1,945,937
TOTAL MARKET OB/XF VALUE		117,451
TOTAL LAND VALUE - MARKET		1,400,000
TOTAL MARKET VALUE		3,463,388
SOH/AGL Deduction		2,066,673
ASSESSED VALUE		1,396,715
TOTAL EXEMPTION VALUE	HX HB	50,000
BASE TAXABLE VALUE		1,346,715
TOTAL JUST VALUE		3,463,388
NCON VALUE		0
INCOME VALUE		
PREVIOUS YEAR MKT VALUE		3,179,085

PERMIT NUM	DESCRIPTION	AMT	ISSUED

BLD DATE		LGL DATE	
XF DATE		LAND DATE	04/08/2024 MLU
INC DATE		AG DATE	

SALES DATA

OFF RECORD Number	DATE	TYPE INST	Q / U	V / I	RSN CD	SALE PRICE
1676/1308	3/31/2010	WD	U	I	30	441,900
GRANTOR: LEATHERY DONALD L & A						
GRANTEE: LEATHERY DONALD L T						
0938/0221	6/26/2000	WD	U	I		1,550,000
GRANTOR: BISSELL HOWARD C & SA						
GRANTEE: LEATHERY DONALD L &						

BUILDING NOTES

BUILDING DIMENSIONS

EXTRA FEATURES

LN	OB/XF CODE	DESCRIPTION	BLD	CAP	L	W	UNITS	UT	Adj R	ADJ UNIT PRICE	ORIG COND	YEAR ON	YEAR ACTUAL	Q	% COND	OB/XF MKT VALUE	NOTES
21	0857	SANDSTONE/	0	100	11	3	33.00	SF	16.00	16.00	100	2009	2009	3	97	512	
22	0920	CWALL-WD/M	0	100	0	0	43.00	LF	390.00	390.00	100	2009	2009	3	40	6,708	
23	0920	CWALL-WD/M	0	100	0	0	32.00	LF	390.00	390.00	100	2005	2005	3	24	2,995	

LAND DESCRIPTION

TOTAL OB/XF 10,215

LN	USE CODE	CLS	LAND USE DESCRIPTION	CAP	RD	LOC ZONE	FRONT	DEPTH	TOT LND UTS	UNIT TYPE	DT	DPTH FACT	% COND	TOT ADJ	UNIT PRICE	ADJ UNIT PRICE	LAND VALUE	OTHER ADJUSTMENTS AND NOTES	YEAR	DENSITY	DECL	FRZ	YR	CONSRV

REVIEW DATE 02/26/2020 BY DJA Total Acres: 0.00 Total Land Value: 1,400,000 Market: 0 Agricultural: 0 Common: 1,400,000 PRINTED 08/06/2024 BY SYS