LOT 65
IN OR 1979/321
LONG POINT #1 PB 5/85-89

SCHROEDER LIVING TRUST/SCHROEDER DENNIS A TRUSTEE
16 SALT MARSH DR
FERNANDINA BEACH, FL 32034

2024

03-6N-29-00LP-0065-0000

BUILDING CHARACTERISTICS

ELEMENT	CD	CONSTRUCTION
Exterior Wall	16	WD FR STUC 100
Roof Structur	08	IRREGULAR 100
Roof Cover	07	CONC TILE 100
Interior Wall	05	DRYWALL 100
Interior Floo	12	HARDWOOD 70
Interior Floo	14	CARPET 30
Air Condition	03	CENTRAL 100
Heating Type	04	AIR DUCTED 100
Bedrooms		4 100
Bathrooms		3.5 100
Frame	02	WOOD FRAME 100
Stories	2.	2. 100
Units		0 100
Quality	01	Quality Level 01
DOR CODE	0100	SINGLE FAMILY
MAP NUM		MKT AREA 10
NEIGHBORHOOD/LOC	10007.00	

AREA TYPE	TOTAL GROSS AREA	PCT OF BASE	TOT ADJ AREA	SUBAREA MARKET VALUE
BAS	3,156	100	3,156	601,229
FGR	220	55	121	23,051
FGR	632	55	348	66,295
FOP	132	30	40	7,620
FOP	200	30	60	11,430
FOP	256	30	77	14,669
FOP	607	30	182	34,671
FST	25	55	14	2,667
FST	40	55	22	4,191
FST	187	55	103	19,621
TOTALS	9,768		6,800	1,295,423

MARKET ADJUSTMENTS

TYPE	MDL	EFF. AREA	TOT ADJ PTS	EFF. BASE RATE	REPL. COST NEW	AYB	EYB	ECON	FNCT		NORM	% COND
0900	12	6,800	159.5810	199.48	1,356,464	2014	2014	0	0	0	4.50	95.50

1 SNGL FAM – 100% - 2015 Heated Area: 5266 HX Base Yr 2015

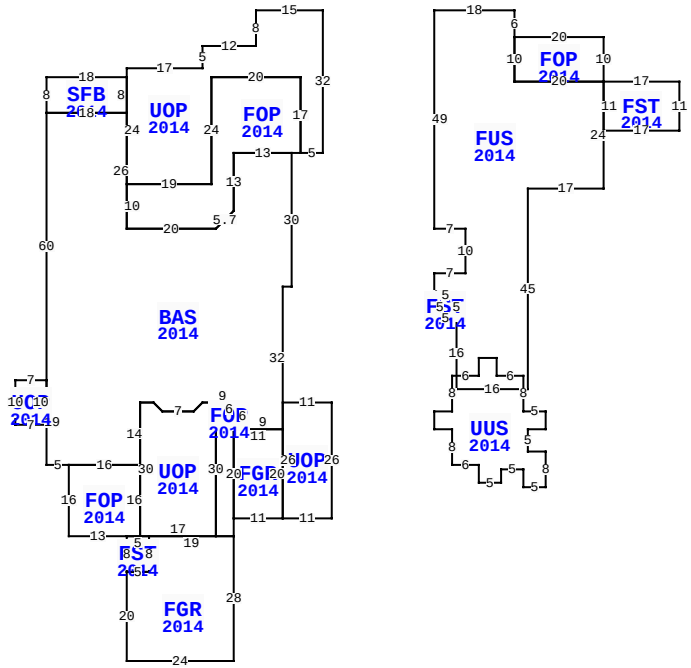

** This building has 17 Sub-Areas

16 SALT MARSH DR, FERNANDINA BEACH

BLD DATE		LGL DATE	
XF DATE		LAND DATE	04/08/2024 MLU
INC DATE		AG DATE	

NASSAU COUNTY PROPERTY

PAGE 1 of 1 5

VALUATION SUMMARY

VALUATION BY		STANDARD
Tax Group: 5	Tax Dist:	
BUILDING MARKET VALUE		1,295,423
TOTAL MARKET OB/XF VALUE		130,727
TOTAL LAND VALUE - MARKET		850,000
TOTAL MARKET VALUE		2,276,150
SOH/AGL Deduction		653,129
ASSESSED VALUE		1,623,021
TOTAL EXEMPTION VALUE	HX HB	50,000
BASE TAXABLE VALUE		1,573,021
TOTAL JUST VALUE		2,276,150
NCON VALUE		0
INCOME VALUE		
PREVIOUS YEAR MKT VALUE		2,021,843

PERMIT NUM	DESCRIPTION	AMT	ISSUED
B1327678	CO ISSUED	0	12/04/2014
R1413818	REPAIR/RRF	63,613	02/01/2014
B1327678	NEW CONSTR	649,966	09/01/2013
B1327763	SWIM POOL	40,000	09/01/2013

SALES DATA

OFF RECORD Number	DATE	TYPE INST	Q U	V I	RSN CD	SALE PRICE
1979/0321	4/14/2015	WD	U	I	11	100
GRANTOR: SCHROEDER DENNIS A &						
GRANTEE: SCHROEDER LIVING TR						
1796/1433	5/31/2012	WD	U	V	31	475,000
GRANTOR: WARFIELD MICHAEL J						
GRANTEE: SCHROEDER DENNIS A						

BUILDING NOTES

EXTRA FEATURES

LN	OB/XF CODE	DESCRIPTION	BLD	CAP	L	W	UNITS	UT	Adj R	ADJ UNIT PRICE	ORIG COND	YEAR ON	YEAR ACTUAL	Q	% COND	OB/XF MKT VALUE	NOTES
1	0855	CONC PAVER	0	100	0	0	2,657.00	SF	7.00	7.00	100	2014	2014	3	95	17,669	
2	0855	CONC PAVER	0	100	0	0	354.00	SF	7.00	7.00	100	2014	2014	3	95	2,354	
3	0855	CONC PAVER	0	100	0	0	311.00	SF	7.00	7.00	100	2014	2014	3	95	2,068	
4	0600	SUMMER KIT	0	100	0	0	1.00	UT	20,000.00	20,000.00	100	2014	2014	3	65	13,000	
5	0504	FP-ELECTRI	0	100	0	0	1.00	UT	2,000.00	2,000.00	100	2014	2014	3	96	1,920	
6	0463	FENCE GATE	0	100	0	0	1.00	UT	300.00	300.00	100	2014	2014	3	87	261	
7	1126	CB/STC 8"	0	100	0	0	245.00	SF	8.00	8.00	100	2014	2014	3	95	1,862	
8	1126	CB/STC 8"	0	100	0	0	96.00	SF	8.00	8.00	100	2014	2014	3	95	730	
9	0410	ELEVATOR	0	100	0	0	1.00	UT	15,000.00	15,000.00	100	2014	2014	3	100	15,000	
10	0861	POOL GUNIT	0	100	0	0	340.00	SF	297.50	297.50	100	2014	2014	3	75	75,863	

BUILDING DIMENSIONS

UOP=[YR=2014] W15S8W12S5W17S2 SFB=[YR=2014] W18S8
BAS=[YR=2014] S60 UOP=[YR=2014] W7S10E7N10$ S19E5
FOP=[YR=2014] S16E13 FST=[YR=2014] S8 FGR=[YR=2014] S20E24N28
FOP=[YR=2014] N4 FGR=[YR=2014] E11 UOP=[YR=2014] E11N26W11
S26$ N20W11S20$ N20E2N6W6 UOP=[YR=2014] W3 D2 L2 W7 U2 L2
W3S30 E17N30$ S30E4$ W19S8W5$ E5N8W5 $ E3N16W16$ E16N14E3 D2
R2 E7 U2 R2 E9S6E9N32E2N30 FOP=[YR=2014] E2
N17W20S24W19S10E20 U4 R4 N13 E13$ W13S13 D4 L4 W20N26W18$
E18N8$ S24E19N24E20S17E5N32$ PTR=E25 FUS=[YR=2014] E18S6
FOP=[YR=2014] E20 S10 W20 N10$ S10 E20 FST=[YR=2014] E17 S11
W17 N11$ S24 W17 S45W16N16 FST=[YR=2014] N5W5S5E5 $ W5N10
E7N10W7N49$ W25$ PTR= E25 S90 UUS=[YR=2014] E4N8E6N4E4S4E6

LAND DESCRIPTION

TOTAL OB/XF 130,727

LN	USE CODE	CLS	LAND USE DESCRIPTION	CAP	RD	LOC ZONE	FRONT	DEPTH	TOT LND UTS	UNIT TYPE	DT	DPTH FACT	% COND	TOT ADJ	UNIT PRICE	ADJ UNIT PRICE	LAND VALUE	OTHER ADJUSTMENTS AND NOTES	YEAR	DENSITY	DECL	FRZ	YR	CONSRV
1	000116	C	SFR MARSH	100		PUD	0.00	0.00	1.00	LT		1.00	1.00	1.00	850,000.00	850,000.00	850,000							

REVIEW DATE 05/12/2019 BY KBA Total Acres: 0.00 Total Land Value: 850,000 Market: 0 Agricultural: 0 Common: 850,000 PRINTED 08/06/2024 BY SYS