LOT 21
LONG POINT #1 PB 5/85-89

FENN MARK & RAFFAELA MARIE
58 LONG POINT DR
FERNANDINA BEACH, FL 32034

2024

03-6N-29-00LP-0021-0000

BUILDING CHARACTERISTICS

ELEMENT	CD	CONSTRUCTION
Exterior Wall	10	ABOVE AVG 100
Roof Structur	04	WOOD TRUSS 100
Roof Cover	03	COMP SHNGL 100
Interior Wall	05	DRYWALL 100
Interior Floo	12	HARDWOOD 80
Interior Floo	14	CARPET 20
Air Condition	03	CENTRAL 100
Heating Type	04	AIR DUCTED 100
Bedrooms		3 100
Bathrooms		3 100
Frame	02	WOOD FRAME 100
Stories	2.	2. 100
Units		0 100
Quality	04	Quality Level 04

DOR CODE	0100	SINGLE FAMILY	
MAP NUM		MKT AREA	10
NEIGHBORHOOD/LOC	10007.00		

AREA TYPE	TOTAL GROSS AREA	PCT OF BASE	TOT ADJ AREA	SUBAREA MARKET VALUE
BAS	3,065	100	3,065	574,105
DCK	20	10	2	375
DCK	24	10	2	375
DCK	40	10	4	749
FGR	766	55	421	78,858
FOP	183	30	55	10,302
FSP	374	40	150	28,097
FUS	732	100	732	137,111
STR	68	10	7	1,311
UAT	240	10	24	4,495
TOTALS	6,682		4,696	879,608

MARKET ADJUSTMENTS

TYPE	MDL	EFF. AREA	TOT ADJ PTS	EFF. BASE RATE	REPL. COST NEW	AYB	EYB	ECON	FNCT		NORM	% COND
0500	11	4,696	124.8720	187.31	879,608	2022	2022	0	0	0	0.00	100.00

1 SFR CUST – 100% - 2023 Heated Area: 3797 HX Base Yr 2023

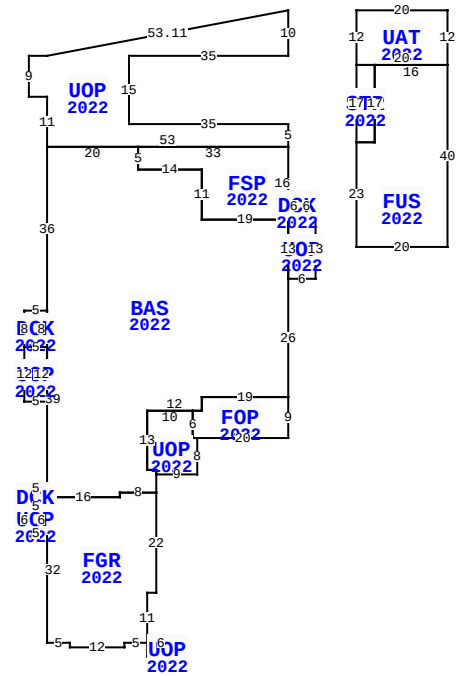

** This building has 16 Sub-Areas

58 LONG POINT DR, FERNANDINA BEACH

BLD DATE		LGL DATE	
XF DATE		LAND DATE	04/08/2024 MLU
INC DATE		AG DATE	

NASSAU COUNTY PROPERTY

PAGE 1 of 1 5

VALUATION SUMMARY

VALUATION BY		STANDARD
Tax Group: 5	Tax Dist:	
BUILDING MARKET VALUE		879,608
TOTAL MARKET OB/XF VALUE		91,397
TOTAL LAND VALUE - MARKET		750,000
TOTAL MARKET VALUE		1,721,005
SOH/AGL Deduction		94,971
ASSESSED VALUE		1,626,034
TOTAL EXEMPTION VALUE	HX HB	50,000
BASE TAXABLE VALUE		1,576,034
TOTAL JUST VALUE		1,721,005
NCON VALUE		0
INCOME VALUE		
PREVIOUS YEAR MKT VALUE		1,578,674

PERMIT NUM	DESCRIPTION	AMT	ISSUED
20223876	ADDITION	0	05/01/2022
20210523	NEW CONSTR	0	03/01/2021

SALES DATA

OFF RECORD Number	DATE	TYPE INST	Q / U	V / I	RSN CD	SALE PRICE
2441/1115	3/10/2021	WD	Q	V	01	475,000
GRANTOR: HOOT OWL HOMES LLC						
GRANTEE: FENN MARK & RAFFAEL						
2322/1276	12/03/2019	WD	Q	V	01	465,000
GRANTOR: BROHM GERARD P & ALIS						
GRANTEE: HOOT OWL HOMES LLC						

BUILDING NOTES

BUILDING DIMENSIONS

UOP=[YR=2022] L53 D10 W4S9E4 S11 BAS=[YR=2022] S36 DCK=[YR=2022] W5 S8 UOP=[YR=2022] S12 E5 N12 W5$ E5 N8$ S39 DCK=[YR=2022] W5 S4 UOP=[YR=2022] S6 E5 N6 W5$ E5 N4$S2 FGR=[YR=2022] S32 E5 S1 E12 N1 E5UOP=[YR=2022] S3 E4 S1 E2 N4 W6$ N11E2 N22 W8 S1 W16$ E16 N1 E8 N4UOP=[YR=2022] E9 N8 FOP=[YR=2022] E20 N9 W19 S3 W2 S6 E1 $ W1 N6 W10 S13E2S1$ N1 W2 N13 E12 N3 E19 N26UOP=[YR=2022] E6 N13 W2 DCK=[YR=2022] N6W4S6E4$ W4 S13$ N13FSP=[YR=2022] N16W33S5E14S11E19$ W19N11W14N5W20$ E53 N5W35N15 E35N10$ PTR=E15 UAT=[YR=2022] E20 S12 FUS=[YR=2022] S40 W20 N23 STR=[YR=2022] N17E4S17W4$ E4N17 E16$ W20 N12$ W15$.

EXTRA FEATURES

LN	OB/XF CODE	DESCRIPTION	BLD	CAP	L	W	UNITS	UT	Adj R	ADJ UNIT PRICE	ORIG COND	YEAR ON	YEAR ACTUAL	Q	% COND	OB/XF MKT VALUE	NOTES
1	0504	FP-ELECTRI	0	100	0	0	1.00	UT	2,000.00	2,000.00	100	2022	2022	3	100	2,000	
2	0855	CONC PAVER	0	100	0	0	2,015.00	SF	10.00	10.00	100	2022	2022	3	100	20,150	
3	0861	POOL GUNIT	0	100	0	0	538.00	SF	85.00	85.00	100	2022	2022	3	98	44,815	
4	0871	POOL HTR R	0	100	0	0	1.00	UT	2,000.00	2,000.00	100	2022	2022	3	97	1,940	
5	0911	SCRN RM A	0	100	0	0	1,325.00	SF	17.50	17.50	100	2022	2022	3	97	22,492	

LAND DESCRIPTION

TOTAL OB/XF 91,397

LN	USE CODE	CLS	LAND USE DESCRIPTION	CAP	RD	LOC ZONE	FRONT	DEPTH	TOT LND UTS	UNIT TYPE	DT	DPTH FACT	% COND	TOT ADJ	UNIT PRICE	ADJ UNIT PRICE	LAND VALUE	OTHER ADJUSTMENTS AND NOTES	YEAR	DENSITY	DECL	FRZ	YR	CONSRV
1	000140	C	SFR GOLF A	100		PUD	0.00	0.00	1.00	LT		1.00	1.00	1.00	750,000.00	750,000.00	750,000							

REVIEW DATE 11/16/2022 BY DJ Total Acres: 0.00 Total Land Value: 750,000 Market: 0 Agricultural: 0 Common: 750,000 PRINTED 08/06/2024 BY SYS