LOT 14
LONG POINT #1 PB 5/85-89

NEWBURGER CAROL
44 LONG POINT DR
FERNANDINA BEACH, FL 32034

2024

03-6N-29-00LP-0014-0000

BUILDING CHARACTERISTICS

ELEMENT	CD	CONSTRUCTION
Exterior Wall	10	ABOVE AVG 100
Roof Structur	08	IRREGULAR 100
Roof Cover	07	CONC TILE 100
Interior Wall	05	DRYWALL 80
Interior Wall	06	CUST PANEL 20
Interior Floo	11	CLAY TILE 50
Interior Floo	12	HARDWOOD 30
Interior Floo	14	CARPET 20
Air Condition	03	CENTRAL 100
Heating Type	04	AIR DUCTED 100
Bedrooms		4 100
Bathrooms		4.5 100
Frame	02	WOOD FRAME 100
Stories	2.	2. 100
Units		0 100
Quality	06	Quality Level 06
DOR CODE	0100	SINGLE FAMILY
MAP NUM		MKT AREA 10
NEIGHBORHOOD/LOC	10007.00	

AREA TYPE	TOTAL GROSS AREA	PCT OF BASE	TOT ADJ AREA	SUBAREA MARKET VALUE
BAS	2,181	100	2,181	783,397
BAS	352	100	352	126,436
FGR	710	55	390	140,085
FOP	12	30	4	1,436
FOP	56	30	17	6,106
FOP	128	30	38	13,649
FOP	212	30	64	22,988
FOP	312	30	94	33,764
FSP	240	40	96	34,483
FST	8	55	4	1,436
TOTALS	6,321		5,138	1,845,527

MARKET ADJUSTMENTS

TYPE	MDL	EFF. AREA	TOT ADJ PTS	EFF. BASE RATE	REPL. COST NEW	AYB	EYB	ECON	FNCT		NORM	% COND
0500	12	5,138	241.8795	362.82	1,864,169	2000	2020	0	0	0	1.00	99.00

1 SFR CUST – 0% - 2023 Heated Area: 4378 HX Base Yr

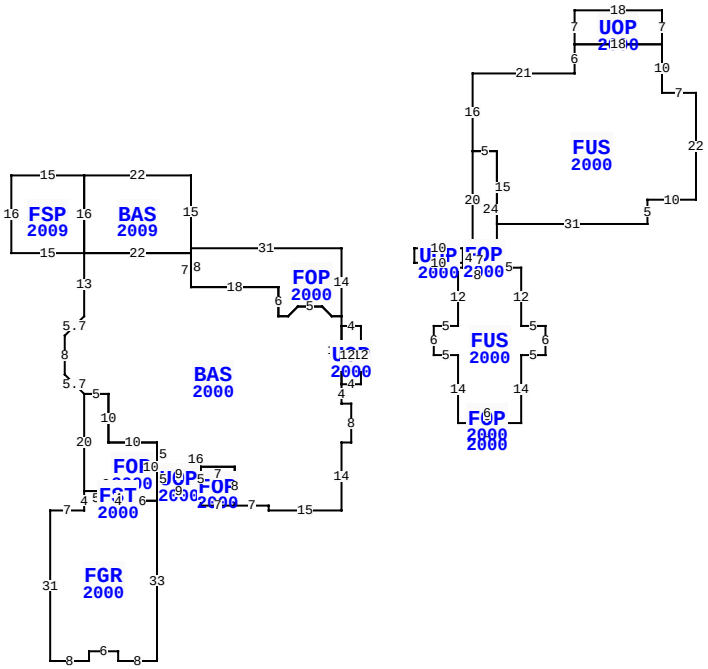

** This building has 17 Sub-Areas

44 LONG POINT DR, FERNANDINA BEACH

BLD DATE	12/21/2009	DJ	LGL DATE		
XF DATE			LAND DATE	04/08/2024	MLU
INC DATE			AG DATE		

NASSAU COUNTY PROPERTY

PAGE 1 of 2 5

VALUATION SUMMARY

VALUATION BY	STANDARD
Tax Group: 5	Tax Dist:
BUILDING MARKET VALUE	1,845,527
TOTAL MARKET OB/XF VALUE	111,048
TOTAL LAND VALUE - MARKET	750,000
TOTAL MARKET VALUE	2,706,575
SOH/AGL Deduction	0
ASSESSED VALUE	2,706,575
TOTAL EXEMPTION VALUE	0
BASE TAXABLE VALUE	2,706,575
TOTAL JUST VALUE	2,706,575
NCON VALUE	0
INCOME VALUE	
PREVIOUS YEAR MKT VALUE	2,601,967

PERMIT NUM	DESCRIPTION	AMT	ISSUED
B22055	ADDITION	111,540	11/01/2008
R11637	REPAIR/RRF	0	11/01/2008
B9906319	SWIM POOL	21,500	07/01/1999
B9905850	NEW CONSTR	498,161	03/01/1999

SALES DATA

OFF RECORD Number	DATE	TYPE INST	Q / U	V / I	RSN CD	SALE PRICE
2562/0641	5/11/2022	WD	Q	I	02	3,200,000
GRANTOR: LAGASSE FELIX G JR						
GRANTEE: NEWBURGER CAROL						
2457/0877	4/29/2021	WD	Q	I	01	1,873,100
GRANTOR: PILCHER GEORGE STAPLE						
GRANTEE: LAGASSE FELIX G JR						

BUILDING NOTES

BUILDING DIMENSIONS

FOP=[YR=2000] W31BAS=[YR=2009] N15 W22 FSP=[YR=2009] W15 S16 E15 N16$ S16 BAS=[YR=2000] S13 L4 D4 S8 R4 D4 FOP=[YR=2000] S20 FGR=[YR=2000] S4 W7 S31 E8 N2 E6 S2E8 N33 W6 FST=[YR=2000] N2 W4 S2 E4$ W4 N2 W5 $ E9 S2 E6 N2 UOP=[YR=2000] E9 FOP=[YR=2000] S3 E7 N8 W7 S5 $ N5 W9 S5 $ N10 W10 N10W5 $ E5 S10 E10 S5 E16 S8 E7 S1 E15 N14 E2 N8 W2 N4 UOP=[YR=2000] E4 N12 W4 S12 $ N14 W2 U2 L2 W5 D2 L2 W2 N6 W18 N7 W22$ E22N1$ S8 E18 S6 E2 U2 R2 E5 D2 R2 E2 N14 $ PTR= E15 UOP=[YR=2000] E10 FOP=[YR=2000] E2 N20 FUS=[YR=2000] N16 E21 N6 UOP=[YR=2000] N7 E18 S7 W18 $ E18 S10 E7 S22 W10 S5 W31 N15 W5 $E5 S24FUS=[YR=2000] E5 S12 E5 S6 W5S14 W3 UOP=[YR=2000] S2 W8 N2 E8 $ W1 FOP=[YR=2000] W6

EXTRA FEATURES

LN	OB/XF CODE	DESCRIPTION	BLD	CAP	L	W	UNITS	UT	Adj R	ADJ UNIT PRICE	ORIG COND	YEAR ON	YEAR ACTUAL	Q	% COND	OB/XF MKT VALUE	NOTES
1	0504	FP-ELECTRI	0	0	0	0	1.00	UT	2,000.00	2,000.00	100	2000	2000	3	84	1,680	
2	0825	BRICK	0	0	0	0	4,176.00	SF	12.50	12.50	100	2000	2000	3	94	49,068	
3	1126	CB/STC 8"	0	0	0	0	1,015.00	SF	8.00	8.00	100	2000	2000	3	79	6,415	
4	0855	CONC PAVER	0	0	0	0	577.00	SF	10.00	10.00	100	2000	2000	3	79	4,558	
5	0861	POOL GUNIT	0	0	0	0	386.00	SF	85.00	85.00	100	2009	2009	3	56	18,374	
6	1075	TRELLIS G	0	0	0	0	78.00	SF	35.00	35.00	100	2000	2000	3	28	764	
7	0463	FENCE GATE	0	0	0	0	4.00	UT	300.00	300.00	100	2000	2000	3	52	624	
8	1127	BRICK 8"	0	0	0	0	44.00	SF	11.00	11.00	100	2000	2000	3	94	455	
9	0810	CONCRETE A	0	0	0	0	75.00	SF	6.50	6.50	100	2000	2000	3	79	385	
10	0857	SANDSTONE/	0	0	0	0	2,027.00	SF	12.80	12.80	100	2009	2009	3	97	25,167	

TOTAL OB/XF 107,490

LAND DESCRIPTION

LN	USE CODE	CLS	LAND USE DESCRIPTION	CAP	RD	LOC ZONE	FRONT	DEPTH	TOT LND UTS	UNIT TYPE	DT	DPTH FACT	% COND	TOT ADJ	UNIT PRICE	ADJ UNIT PRICE	LAND VALUE	OTHER ADJUSTMENTS AND NOTES	YEAR	DENSITY	DECL	FRZ	YR	CONSRV
1	000140	C	SFR GOLF A	0		PUD	0.00	0.00	1.00	LT		1.00	1.00	1.00	750,000.00	750,000.00	750,000							

REVIEW DATE 11/08/2019 BY DJA Total Acres: 0.00 Total Land Value: 750,000 Market: 0 Agricultural: 0 Common: 750,000 PRINTED 08/06/2024 BY SYS

LOT 14
LONG POINT #1 PB 5/85-89

NEWBURGER CAROL
44 LONG POINT DR
FERNANDINA BEACH, FL 32034

2024

03-6N-29-00LP-0014-0000

BUILDING CHARACTERISTICS

ELEMENT	CD	CONSTRUCTION

DOR CODE	0100	SINGLE FAMILY	
MAP NUM		MKT AREA	10
NEIGHBORHOOD/LOC	10007.00		

AREA TYPE	TOTAL GROSS AREA	PCT OF BASE	TOT ADJ AREA	SUBAREA MARKET VALUE
TOTALS				

MARKET ADJUSTMENTS

TYPE	MDL	EFF. AREA	TOT ADJ PTS	EFF. BASE RATE	REPL. COST NEW	AYB	EYB	ECON	FNCT		NORM	% COND

BLD DATE	12/21/2009	DJ	LGL DATE
XF DATE			LAND DATE 04/08/2024 MLU
INC DATE			AG DATE

NASSAU COUNTY PROPERTY

PAGE 2 of 2 5

VALUATION SUMMARY

VALUATION BY	STANDARD
Tax Group: 5	Tax Dist:
BUILDING MARKET VALUE	1,845,527
TOTAL MARKET OB/XF VALUE	111,048
TOTAL LAND VALUE - MARKET	750,000
TOTAL MARKET VALUE	2,706,575
SOH/AGL Deduction	0
ASSESSED VALUE	2,706,575
TOTAL EXEMPTION VALUE	0
BASE TAXABLE VALUE	2,706,575
TOTAL JUST VALUE	2,706,575
NCON VALUE	0
INCOME VALUE	
PREVIOUS YEAR MKT VALUE	2,601,967

PERMIT NUM	DESCRIPTION	AMT	ISSUED

SALES DATA

OFF RECORD Number	DATE	TYPE INST	Q / U	V / I	RSN CD	SALE PRICE
2562/0641	5/11/2022	WD	Q	I	02	3,200,000
GRANTOR: LAGASSE FELIX G JR						
GRANTEE: NEWBURGER CAROL						
2457/0877	4/29/2021	WD	Q	I	01	1,873,100
GRANTOR: PILCHER GEORGE STAPLE						
GRANTEE: LAGASSE FELIX G JR						

BUILDING NOTES

BUILDING DIMENSIONS

EXTRA FEATURES

LN	OB/XF CODE	DESCRIPTION	BLD	CAP	L	W	UNITS	UT	Adj R	ADJ UNIT PRICE	ORIG COND	YEAR ON	YEAR ACTUAL	Q	% COND	OB/XF MKT VALUE	NOTES
11	0877	JACUZZI	0	0	0	0	1.00	UT	1,000.00	1,000.00	100	2009	2009	3	40	400	
12	0600	SUMMER KIT	0	0	0	0	1.00	UT	5,000.00	5,000.00	100	2009	2009	3	40	2,000	
13	0462	ST/AL FNC	0	0	16	0	64.00	SF	10.00	10.00	100	2009	2009	3	56	358	
14	0871	POOL HTR R	0	0	0	0	1.00	UT	2,000.00	2,000.00	100	2009	2009	3	40	800	

LAND DESCRIPTION

TOTAL OB/XF 3,558

LN	USE CODE	CLS	LAND USE DESCRIPTION	CAP	RD	LOC ZONE	FRONT	DEPTH	TOT LND UTS	UNIT TYPE	DT	DPTH FACT	% COND	TOT ADJ	UNIT PRICE	ADJ UNIT PRICE	LAND VALUE	OTHER ADJUSTMENTS AND NOTES	YEAR	DENSITY	DECL	FRZ	YR	CONSRV

REVIEW DATE 11/08/2019 BY DJA Total Acres: 0.00 Total Land Value: 750,000 Market: 0 Agricultural: 0 Common: 750,000 PRINTED 08/06/2024 BY SYS