LOT 12
LONG POINT #1 PB 5/85-89

BLAIR KAREN E
40 LONG POINT DR
FERNANDINA BEACH, FL 32034

2024

03-6N-29-00LP-0012-0000

BUILDING CHARACTERISTICS

ELEMENT	CD	CONSTRUCTION
Exterior Wall	16	WD FR STUC 100
Roof Structur	08	IRREGULAR 100
Roof Cover	13	STAND SEAM 100
Interior Wall	05	DRYWALL 90
Interior Wall	08	DECORATIVE 10
Interior Floo	12	HARDWOOD 60
Interior Floo	14	CARPET 40
Air Condition	03	CENTRAL 100
Heating Type	04	AIR DUCTED 100
Bedrooms		3 100
Bathrooms		4.5 100
Frame	02	WOOD FRAME 100
Stories	2.	2. 100
Units		0 100
Quality	04	Quality Level 04
DOR CODE	0100	SINGLE FAMILY
MAP NUM		MKT AREA 10
NEIGHBORHOOD/LOC	10007.00	

AREA TYPE	TOTAL GROSS AREA	PCT OF BASE	TOT ADJ AREA	SUBAREA MARKET VALUE
BAS	2,853	100	2,853	601,510
DCK	16	10	2	422
DCK	24	10	2	422
FGR	768	55	422	88,972
FOP	60	30	18	3,795
FOP	1,135	30	340	71,684
FUS	1,155	100	1,155	243,514
SFB	528	80	422	88,972
UOP	8	20	2	422
UOP	30	20	6	1,265
TOTALS	7,152		5,337	1,125,223

MARKET ADJUSTMENTS

TYPE	MDL	EFF. AREA	TOT ADJ PTS	EFF. BASE RATE	REPL. COST NEW	AYB	EYB	ECON	FNCT		NORM	% COND
0500	11	5,337	153.6150	230.42	1,229,752	2006	2006	0	0	0	8.50	91.50

1 SFR CUST – 0% - 0 Heated Area: 4430 HX Base Yr

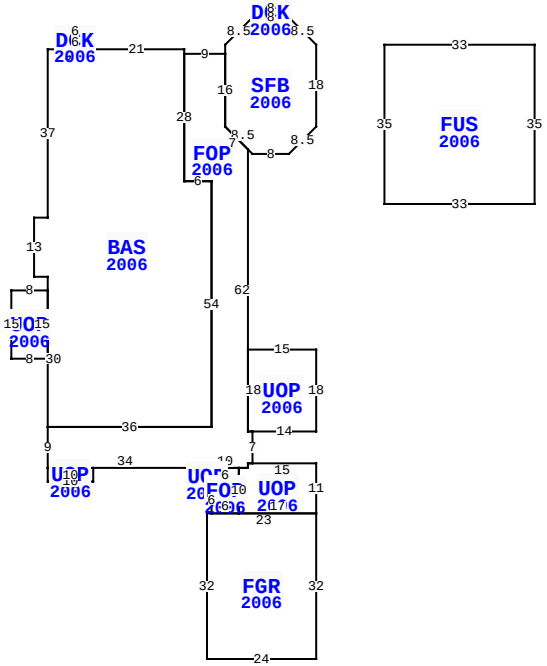

** This building has 13 Sub-Areas

40 LONG POINT DR, FERNANDINA BEACH

BLD DATE		LGL DATE	
XF DATE		LAND DATE	04/08/2024 MLU
INC DATE		AG DATE	

EXTRA FEATURES

LN	OB/XF CODE	DESCRIPTION	BLD	CAP	L	W	UNITS	UT	Adj R	ADJ UNIT PRICE	ORIG COND	YEAR ON	YEAR ACTUAL	Q	% COND	OB/XF MKT VALUE	NOTES
1	0861	POOL GUNIT	0	0	12	24	288.00	SF	85.00	85.00	100	2006	2006	3	44	10,771	
2	0855	CONC PAVER	0	0	0	0	1,622.00	SF	10.00	10.00	100	2006	2006	3	87	14,111	
3	0855	CONC PAVER	0	0	0	0	217.00	SF	10.00	10.00	100	2006	2006	3	87	1,888	
4	0855	CONC PAVER	0	0	0	0	415.00	SF	10.00	10.00	100	2006	2006	3	87	3,611	
5	1126	CB/STC 8"	0	0	8	7	56.00	SF	8.00	8.00	100	2006	2006	3	87	390	
6	0600	SUMMER KIT	0	0	0	0	1.00	UT	5,000.00	5,000.00	100	2006	2006	3	27	1,350	
7	0877	JACUZZI	0	0	0	0	1.00	UT	1,000.00	1,000.00	100	2006	2006	3	27	270	
8	0504	FP-ELECTRI	0	0	0	0	1.00	UT	2,000.00	2,000.00	100	2006	2006	3	90	1,800	

NASSAU COUNTY PROPERTY

VALUATION SUMMARY

VALUATION BY	STANDARD
Tax Group: 5	Tax Dist:
BUILDING MARKET VALUE	1,125,223
TOTAL MARKET OB/XF VALUE	34,191
TOTAL LAND VALUE - MARKET	750,000
TOTAL MARKET VALUE	1,909,414
SOH/AGL Deduction	395,834
ASSESSED VALUE	1,513,580
TOTAL EXEMPTION VALUE	0
BASE TAXABLE VALUE	1,513,580
TOTAL JUST VALUE	1,909,414
NCON VALUE	0
INCOME VALUE	
PREVIOUS YEAR MKT VALUE	1,760,467

PERMIT NUM	DESCRIPTION	AMT	ISSUED
B240005912	SCREEN ENC T-610	14,000	05/15/2024
M11081	MECH OTHER	0	02/01/2006
P09903	OTHER	0	08/01/2005
E0515084	ELEC OTHER	3,000	06/01/2005
C0515279	CO ISSUED	857,000	05/01/2005
R0507664	REPAIR/RRF	16,800	05/01/2005

SALES DATA

OFF RECORD Number	DATE	TYPE INST	Q / U	V / I	RSN CD	SALE PRICE
2426/0326	12/16/2020	QC	U	I	11	220,000
GRANTOR: MULHOLLAND KRISTEN E						
GRANTEE: BLAIR R CARY & KARE						
2419/0328	12/16/2020	QC	U	I	11	100
GRANTOR: BLAIR HOLDING LLC						
GRANTEE: BLAIR R CARY & KARE						

BUILDING NOTES

BUILDING DIMENSIONS

SFB=[YR=2006] U6 L6 DCK=[YR=2006] N2 W8S2 E8$ W8 L6 D6 S2 FOP=[YR=2006] W9 BAS=[YR=2006] N1 W21 DCK=[YR=2006] N4 W6 S4 E6 $ W9 S37 W3 S13 E3 S3 UOP=[YR=2006] W8 S15 E8 N15 $ S30 E36 N54 W6 N28 $ S28 E6 S54 W36 S9 UOP=[YR=2006] S3 E10 N3 W10 $ E34 UOP=[YR=2006] S4 E2 FOP=[YR=2006] S6 FGR=[YR=2006] W1 S32 E24 N32 UOP=[YR=2006] N11 W15 S1 W2 S10 E17 $ W23 $ E6 N10 W6 S4 $ N4 W2 $ E10 N1 E1 N7 UOP=[YR=2006] E14 N18 W15 S18 E1 $ W1 N62 L5 U5 N16$ S16 R6 D6 E8 R6 U6 N18$ PTR= E15 FUS=[YR=2006] E33 S35 W33 N35 $ W15 $.

LAND DESCRIPTION

TOTAL OB/XF 34,191

LN	USE CODE	CLS	LAND USE DESCRIPTION	CAP	RD	LOC ZONE	FRONT	DEPTH	TOT LND UTS	UNIT TYPE	DT	DPTH FACT	% COND	TOT ADJ	UNIT PRICE	ADJ UNIT PRICE	LAND VALUE	OTHER ADJUSTMENTS AND NOTES	YEAR	DENSITY	DECL	FRZ	YR	CONSRV
1	000140	C	SFR GOLF A	0		PUD	0.00	0.00	1.00	LT		1.00	1.00	1.00	750,000.00	750,000.00	750,000							

REVIEW DATE 05/12/2019 BY KBA Total Acres: 0.00 Total Land Value: 750,000 Market: 0 Agricultural: 0 Common: 750,000 PRINTED 08/06/2024 BY SYS