LOT 7
ESMT PT OR 1810/159
LONG POINT #1 PB 5/85-89

HENDRICKS SCOT R & JILL C L/E/
30 LONG POINT DR
FERNANDINA BEACH, FL 32034

2024

03-6N-29-00LP-0007-0000

BUILDING CHARACTERISTICS

ELEMENT	CD	CONSTRUCTION
Exterior Wall	10	ABOVE AVG 100
Roof Structur	08	IRREGULAR 100
Roof Cover	03	COMP SHNGL 100
Interior Wall	05	DRYWALL 100
Interior Floo	14	CARPET 70
Interior Floo	12	HARDWOOD 30
Air Condition	03	CENTRAL 100
Heating Type	04	AIR DUCTED 100
Bedrooms		4 100
Bathrooms		4.5 100
Frame	02	WOOD FRAME 100
Stories	2.	2. 100
Units		0 100
Quality	04	Quality Level 04
DOR CODE	0100	SINGLE FAMILY
MAP NUM		MKT AREA 10
NEIGHBORHOOD/LOC	10007.00	

AREA TYPE	TOTAL GROSS AREA	PCT OF BASE	TOT ADJ AREA	SUBAREA MARKET VALUE
BAS	2,409	100	2,409	420,269
FGR	713	55	392	68,388
FOP	44	30	13	2,268
FOP	217	30	65	11,339
FUS	348	100	348	60,711
FUS	906	100	906	158,059
UOP	32	20	6	1,047
UOP	40	20	8	1,396
UOP	67	20	13	2,268
UOP	98	20	20	3,489
TOTALS	5,014		4,208	734,118

MARKET ADJUSTMENTS

TYPE	MDL	EFF. AREA	TOT ADJ PTS	EFF. BASE RATE	REPL. COST NEW	AYB	EYB	ECON	FNCT		NORM	% COND
0500	11	4,208	130.6800	196.02	824,852	2000	2000	0	0	0	11.00	89.00

1 SFR CUST – 100% - 2020 Heated Area: 3663 HX Base Yr 2020

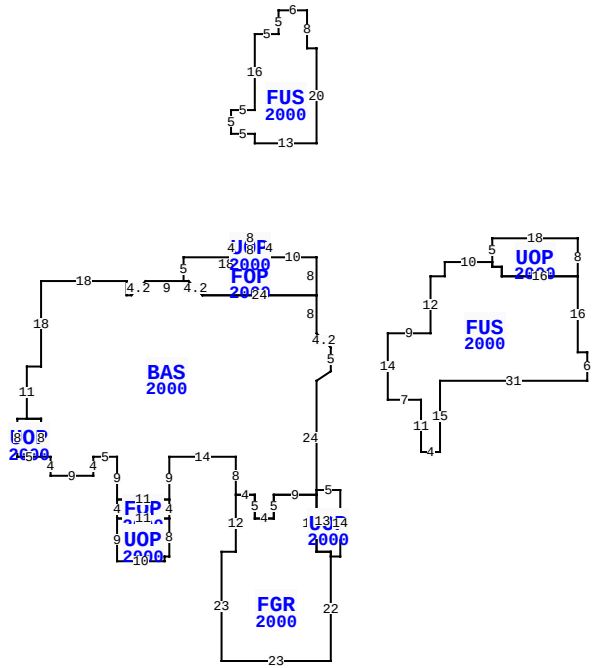

** This building has 11 Sub-Areas

30 LONG POINT DR, FERNANDINA BEACH

BLD DATE		LGL DATE	
XF DATE		LAND DATE	04/08/2024 MLU
INC DATE		AG DATE	

NASSAU COUNTY PROPERTY

PAGE 1 of 1 5

VALUATION SUMMARY

VALUATION BY		STANDARD
Tax Group: 5	Tax Dist:	
BUILDING MARKET VALUE		734,118
TOTAL MARKET OB/XF VALUE		16,712
TOTAL LAND VALUE - MARKET		750,000
TOTAL MARKET VALUE		1,500,830
SOH/AGL Deduction		584,976
ASSESSED VALUE		915,854
TOTAL EXEMPTION VALUE	HX HB	50,000
BASE TAXABLE VALUE		865,854
TOTAL JUST VALUE		1,500,830
NCON VALUE		0
INCOME VALUE		
PREVIOUS YEAR MKT VALUE		1,368,067

PERMIT NUM	DESCRIPTION	AMT	ISSUED
B9906277	NEW CONSTR	323,000	07/01/1999

SALES DATA

OFF RECORD Number	DATE	TYPE INST	Q / U	V / I	RSN CD	SALE PRICE
2347/0022	3/12/2020	LE	U	I	11	100
GRANTOR: HENDRICKS SCOT R & JI						
GRANTEE: HENDRICKS FAMILY TR						
1899/1135	1/16/2014	WD	Q	I	02	887,500
GRANTOR: HILL VIRGINIA Z TRUST						
GRANTEE: HENDRICKS SCOT R &						

BUILDING NOTES

BUILDING DIMENSIONS

BAS=[YR=2000] N8 FOP=[YR=2000] N8 W10 UOP=[YR=2000] N4 W8 S4 E8 $ W18 S5 E1 D3 R3 E24$ W24 U3 L3 W9 D3 L3 W1 N3 W18 S18 W3 S11 UOP=[YR=2000] W2 S8 E5 N8 W3 $ E3 S8 E2 S4 E9 N4 E5 S9 FOP=[YR=2000] S4 UOP=[YR=2000] S9 E10 N1 E1 N8 W11 $ E11 N4 W11 $ E11 N9 E14 S8 FGR=[YR=2000] S12 W3 S23 E23 N22 UOP=[YR=2000] E2N14 W5 S13 E3 S1 $ N1 W3 N12 W9 S5 W4 N5 W4 $ E4 S5 E4 N5 E9 N24 R3 U2 N5 U3 L3 $ PTR= E15 FUS=[YR=2000] E9 N12 E3 N3 E10 UOP=[YR=2000] N5 E18 S8 W16 N2 W2 N1 $ S1 E2 S2 E16 S16 E2 S6 W31 S15 W4 N11 W7 N14 $ W15 $ PTR= N40 FUS=[YR=2000] N20 W2 N8 W6S5 W5 S16 W5 S5 E5 S2 E13$S40 $.

EXTRA FEATURES

LN	OB/XF CODE	DESCRIPTION	BLD	CAP	L	W	UNITS	UT	Adj R	ADJ UNIT PRICE	ORIG COND	YEAR ON	YEAR ACTUAL	Q	% COND	OB/XF MKT VALUE	NOTES
1	0504	FP-ELECTRI	0	100	0	0	1.00	UT	2,000.00	2,000.00	100	2000	2000	3	84	1,680	
2	0855	CONC PAVER	0	100	0	0	2,220.00	SF	7.00	7.00	100	2014	2014	3	95	14,763	
3	0858	SCULP CONC	0	100	0	0	22.00	SF	13.00	13.00	100	2000	2000	3	94	269	

LAND DESCRIPTION

TOTAL OB/XF 16,712

LN	USE CODE	CLS	LAND USE DESCRIPTION	CAP	RD	LOC ZONE	FRONT	DEPTH	TOT LND UTS	UNIT TYPE	DT	DPTH FACT	% COND	TOT ADJ	UNIT PRICE	ADJ UNIT PRICE	LAND VALUE	OTHER ADJUSTMENTS AND NOTES	YEAR	DENSITY	DECL	FRZ	YR	CONSRV
1	000140	C	SFR GOLF A	100		PUD	0.00	0.00	1.00	LT		1.00	1.00	1.00	750,000.00	750,000.00	750,000							

REVIEW DATE 05/12/2019 BY KBA Total Acres: 0.00 Total Land Value: 750,000 Market: 0 Agricultural: 0 Common: 750,000 PRINTED 08/06/2024 BY SYS