IN OR 2324/1849
PARCELS 2-2 & 5-12
EX 5-14

NITOWITZ RICHARD & VICKIE L/E/
24763 COUNTY ROAD 121
HILLIARD, FL 32046

2024

03-2N-23-0000-0002-0020

NASSAU COUNTY PROPERTY

BUILDING CHARACTERISTICS

ELEMENT	CD	CONSTRUCTION
Exterior Wall	20	FACE BRICK 100
Roof Structur	03	GABLE/HIP 100
Roof Cover	03	COMP SHNGL 100
Interior Wall	05	DRYWALL 100
Interior Floo	14	CARPET 80
Interior Floo	11	CLAY TILE 20
Air Condition	03	CENTRAL 100
Heating Type	04	AIR DUCTED 100
Bedrooms		3 100
Bathrooms		2.5 100
Frame	02	WOOD FRAME 100
Stories	2.	2. 100
Units		0 100
Occupancy	00	NONE 100
Quality	04	Quality Level 04
DOR CODE	5000	IMPROVED AG
MAP NUM		MKT AREA 09
NEIGHBORHOOD/LOC	9001.00	

AREA TYPE	TOTAL GROSS AREA	PCT OF BASE	TOT ADJ AREA	SUBAREA MARKET VALUE
BAS	2,549	100	2,549	306,109
FGR	575	55	316	37,949
FOP	601	30	180	21,616
FUS	676	100	676	81,181
PTO	400	5	20	2,402
UOP	120	20	24	2,882
UOP	135	20	27	3,243
USP	375	30	112	13,450
TOTALS	5,431		3,904	468,831

MARKET ADJUSTMENTS

TYPE	MDL	EFF. AREA	TOT ADJ PTS	EFF. BASE RATE	REPL. COST NEW	AYB	EYB	ECON	FNCT		NORM	% COND
0900	01	3,904	114.0300	142.54	556,476	2002	2002	0	0	0	15.75	84.25

1 SNGL FAM – 100% - 2003 Heated Area: 3225 HX Base Yr 2003

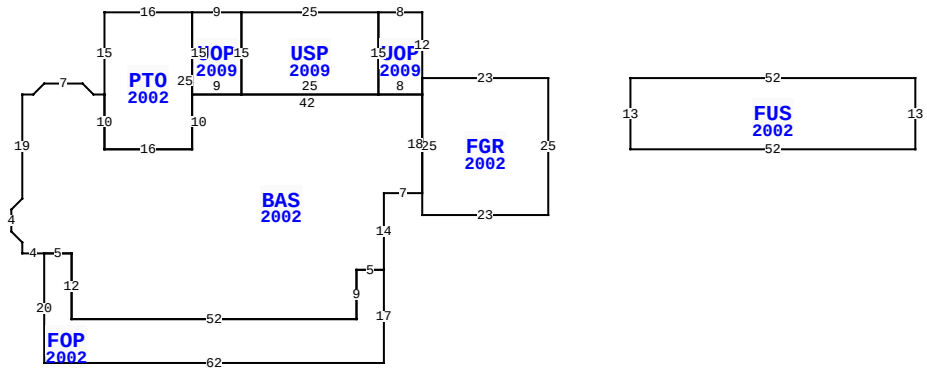

24763 CR 121, HILLIARD

BLD DATE		LGL DATE	
XF DATE		LAND DATE	06/13/2023 MLU
INC DATE		AG DATE	

VALUATION SUMMARY

VALUATION BY		STANDARD
Tax Group: 6	Tax Dist:	
BUILDING MARKET VALUE		468,831
TOTAL MARKET OB/XF VALUE		11,812
TOTAL LAND VALUE - MARKET		550,000
TOTAL MARKET VALUE		554,608
SOH/AGL Deduction		269,204
ASSESSED VALUE		285,404
TOTAL EXEMPTION VALUE	HX HB	50,000
BASE TAXABLE VALUE		235,404
TOTAL JUST VALUE		1,030,643
NCON VALUE		0
INCOME VALUE		
PREVIOUS YEAR MKT VALUE		1,011,793

PERMIT NUM	DESCRIPTION	AMT	ISSUED
230006988	ROOF	21,650	05/30/2023
B23222	XFOB	0	01/01/2010

SALES DATA

OFF RECORD Number	DATE	TYPE INST	Q U	V I	RSN CD	SALE PRICE
2324/1849	11/07/2019	QC	U	I	11	100
GRANTOR: NITOWITZ VICKIE L & R						
GRANTEE: DENMARK KATRINA L						
0961/1938	12/14/2000	PR	U	V	01	100
GRANTOR: THOMPSON TERESA & DAN						
GRANTEE: NITOWITZ VICKIE L						

BUILDING NOTES

EXTRA FEATURES

L N	OB/XF CODE	DESCRIPTION	BLD	CAP	L	W	UNITS	UT	Adj R	ADJ UNIT PRICE	ORIG COND	YEAR ON	YEAR ACTUAL	Q	% COND	OB/XF MKT VALUE	NOTES
1	0811	CONCRETE B	0	100	0	0	895.00	SF	5.20	5.20	100	2002	2002	3	82	3,816	
2	0500	FP-PRE FAB	0	100	0	0	1.00	UT	3,500.00	3,500.00	100	2002	2002	3	86	3,010	
3	0351	CARPORT MT	0	100	32	20	640.00	SF	10.00	10.00	100	2010	2010	3	45	2,880	
4	0940	SHEDS/PORT	0	100	20	12	240.00	SF	19.50	19.50	100	2010	2010	3	45	2,106	

BUILDING DIMENSIONS

FGR=[YR=2002] W23 UOP=[YR=2009] N12 W8 USP=[YR=2009] W25 UOP=[YR=2009] W9 PTO=[YR=2002] W16 S15 BAS=[YR=2002] W2 U2 L2 W7 D2 L2 W2 S19 D2 L2 S4 R2 D2 S2 E4 FOP=[YR=2002] S20 E62 N17 W5 S9 W52 N12 W5 $E5 S12 E52 N9 E5 N14 E7 N18 W42 S10 W16 N10 $ S10 E16 N25$ S15 E9 N15$ S15 E25 N15$ S15 E8 N3 $ S25 E23 N25 $ PTR= E15 FUS=[YR=2002] E52 S13 W52 N13 $W15 $.

LAND DESCRIPTION

TOTAL OB/XF 11,812

L N	USE CODE	CLS	LAND USE DESCRIPTION	CAP	R D	LOC ZONE	FRONT	DEPTH	TOT LND UTS	UNIT TYPE	D T	DPTH FACT	% COND	TOT ADJ	UNIT PRICE	ADJ UNIT PRICE	LAND VALUE	OTHER ADJUSTMENTS AND NOTES	YEAR	DENSITY	DECL	FRZ	YR	CONSRV
1	005000	C	RURAL HOME	100	0004	OR	0.00	0.00	1.00	AC		1.00	1.00	1.00	30,000.00	30,000.00	30,000							
2	005600	A	TIMBER 3 SI	0		OR	0.00	0.00	80.00	AC		1.00	1.00	1.00	415.00	415.00	33,200							
3	005500	A	TIMBER 2 SI	0		OR	0.00	0.00	17.00	AC		1.00	1.00	1.00	555.00	555.00	9,435							
4	005902	A	HARDWOOD SI	0		OR	0.00	0.00	7.00	AC		1.00	1.00	1.00	190.00	190.00	1,330							
5	009910	M	MKT.VAL.AG	0		OR	0.00	0.00	104.00	AC		1.00	1.00	1.00	5,000.00	5,000.00	520,000							

REVIEW DATE 04/13/2020 BY TWA Total Acres: 105.00 Total Land Value: 73,965 Market: 520,000 Agricultural: 43,965 Common: 30,000 PRINTED 08/06/2024 BY SYS