TRACT 3 (EX PT IN OR 430/20)
IN OR 2508/1399
CRAVEY SUB UNR

BROWN VERLON M & HALEY M
85362 JOANN ROAD
YULEE, FL 32097

2024

03-1N-25-2750-0003-0000

NASSAU COUNTY PROPERTY

BUILDING CHARACTERISTICS

ELEMENT	CD	CONSTRUCTION
Exterior Wall	11	BD/BTN AVG 100
Roof Structur	03	GABLE/HIP 100
Roof Cover	03	COMP SHNGL 100
Interior Wall	05	DRYWALL 100
Interior Floo	13	LVT/LAMNT 100
Air Condition	03	CENTRAL 100
Heating Type	04	AIR DUCTED 100
Bedrooms		4 100
Bathrooms		2 100
Frame	02	WOOD FRAME 100
Stories	1.	1. 100
Units		0 100
Quality	04	Quality Level 04

DOR CODE	0100	SINGLE FAMILY	
MAP NUM		MKT AREA	08
NEIGHBORHOOD/LOC	8024.00		

AREA TYPE	TOTAL GROSS AREA	PCT OF BASE	TOT ADJ AREA	SUBAREA MARKET VALUE
BAS	2,528	100	2,528	323,584
FGR	700	55	385	49,280
FOP	120	30	36	4,608
FOP	160	30	48	6,144
FST	18	55	10	1,280
PTO	176	5	9	1,152
TOTALS	3,702		3,016	386,048

MARKET ADJUSTMENTS

TYPE	MDL	EFF. AREA	TOT ADJ PTS	EFF. BASE RATE	REPL. COST NEW	AYB	EYB	ECON	FNCT		NORM	% COND
0900	01	3,016	102.3960	128.00	386,048	2023	2023	0	0	0	0.00	100.00

1 SNGL FAM – 100% - 2024 Heated Area: 2528 HX Base Yr 2024

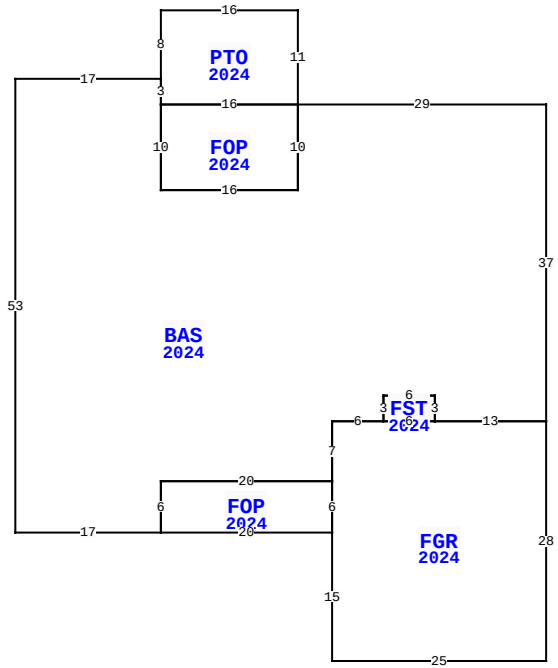

54310 CHURCH RD, CALLAHAN

BLD DATE		LGL DATE	
XF DATE		LAND DATE	
INC DATE		AG DATE	

VALUATION SUMMARY

VALUATION BY		STANDARD
Tax Group: 6	Tax Dist:	
BUILDING MARKET VALUE		394,519
TOTAL MARKET OB/XF VALUE		46,500
TOTAL LAND VALUE - MARKET		35,000
TOTAL MARKET VALUE		476,019
SOH/AGL Deduction		0
ASSESSED VALUE		476,019
TOTAL EXEMPTION VALUE	HX HB	50,000
BASE TAXABLE VALUE		426,019
TOTAL JUST VALUE		476,019
NCON VALUE		441,019
INCOME VALUE		
PREVIOUS YEAR MKT VALUE		47,000

PERMIT NUM	DESCRIPTION	AMT	ISSUED
22001432	CO ISSUED	0	03/01/2023
22004742	NEW CONSTR	409,905	03/28/2022
B15483	NEW CONSTR	0	03/01/2005

SALES DATA

OFF RECORD Number	DATE	TYPE INST	Q / U	V / I	RSN CD	SALE PRICE
2508/1399	10/27/2021	WD	U	I	11	100
GRANTOR: RITTER ROBYN L F/K/A						
GRANTEE: BROWN VERLON M & HA						
1207/1153	2/11/2004	WD	U	I	01	42,500
GRANTOR: BROWN ELMEDA H L/E						
GRANTEE: BROWN ROBYN L						

BUILDING NOTES

BUILDING DIMENSIONS

FOP=[YR=2024;ORIG=70,10] E16 S10 W16 N10 $
BAS=[YR=2024;ORIG=53,7] E17 S3 S10 E16 N10 E29 S37 W13 N3 W6 S3 W6 S7 W20 S6 W17 N53 $
PTO=[YR=2024;ORIG=70,-1] S8 S3 E16 N11 W16 $
FST=[YR=2024;ORIG=96,44] E6 S3 W6 N3 $
FOP=[YR=2024;ORIG=70,54] E20 S6 W20 N6 $
FGR=[YR=2024;ORIG=115,47] W13 W6 W6 S7 S6 S15 E25 N28 $
.

EXTRA FEATURES

LN	OB/XF CODE	DESCRIPTION	BLD	CAP	L	W	UNITS	UT	Adj R	ADJ UNIT PRICE	ORIG COND	YEAR ON	YEAR ACTUAL	Q	% COND	OB/XF MKT VALUE	NOTES
3	0812	CONCRETE C	1	100	0	0	4,385.00	SF	4.00	4.00	100	2024	2023		100	17,540	
4	0476	VF 6 SBPL	1	100	0	0	790.00	LF	32.00	32.00	100	2024	2023		100	25,280	
5	0470	VNYL GATE	1	100	0	0	2.00	UT	300.00	300.00	100	2024	2023		100	600	
6	0911	SCRN RM A	1	100	16	11	176.00	SF	17.50	17.50	100	2024	2023		100	3,080	

LAND DESCRIPTION

TOTAL OB/XF 46,500

LN	USE CODE	CLS	LAND USE DESCRIPTION	CAP	RD	LOC ZONE	FRONT	DEPTH	TOT LND UTS	UNIT TYPE	DT	DPTH FACT	% COND	TOT ADJ	UNIT PRICE	ADJ UNIT PRICE	LAND VALUE	OTHER ADJUSTMENTS AND NOTES	YEAR	DENSITY	DECL	FRZ	YR	CONSRV
1	000100	C	SFR	100	0006	OR	0.00	0.00	1.00	AC		1.00	1.00	1.00	35,000.00	35,000.00	35,000							

REVIEW DATE 08/01/2023 BY KW Total Acres: 1.00 Total Land Value: 35,000 Market: 0 Agricultural: 0 Common: 35,000 PRINTED 08/06/2024 BY SYS

TRACT 3 (EX PT IN OR 430/20)
IN OR 2508/1399
CRAVEY SUB UNR

BROWN VERLON M & HALEY M
85362 JOANN ROAD
YULEE, FL 32097

2024

03-1N-25-2750-0003-0000

NASSAU COUNTY PROPERTY

BUILDING CHARACTERISTICS

ELEMENT	CD	CONSTRUCTION
Exterior Wall	25	MOD METAL 100
Roof Structur	10	STEEL FRME 100
Roof Cover	12	MODULAR MT 100
Interior Wall	07	NONE 100
Interior Floo	03	CONC FINSH 100
Air Condition	01	NONE 100
Heating Type	01	NONE 100
Bedrooms		0 100
Bathrooms		0 100
Frame	05	STEEL 100
Quality	05	Quality Level 05
DOR CODE	0100	SINGLE FAMILY
MAP NUM		MKT AREA 08
NEIGHBORHOOD/LOC	8024.00	

AREA TYPE	TOTAL GROSS AREA	PCT OF BASE	TOT ADJ AREA	SUBAREA MARKET VALUE
BAS	400	100	400	8,387
PTO	80	5	4	84
TOTALS	480		404	8,471

MARKET ADJUSTMENTS

TYPE	MDL	EFF. AREA	TOT ADJ PTS	EFF. BASE RATE	REPL. COST NEW	AYB	EYB	ECON	FNCT		NORM	% COND
6500	01	404	60.5000	21.18	8,557	2023	2023	0	0	0	1.00	99.00

2 GARAGE RES – 100% - 2024 Heated Area: 400 HX Base Yr 2024

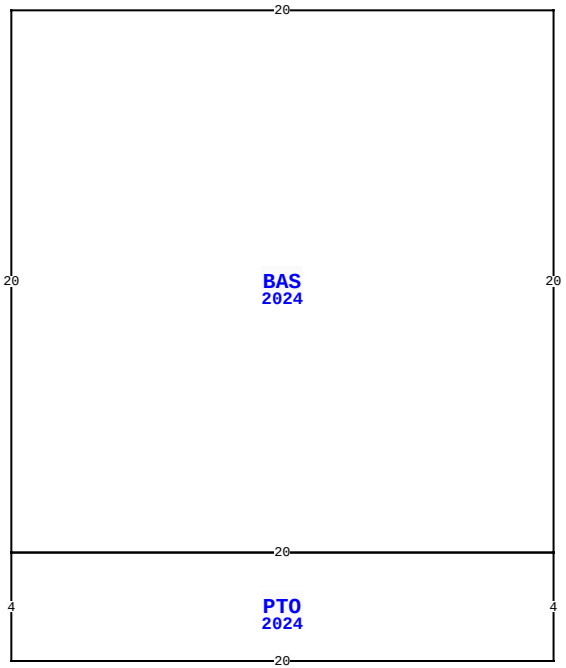

54310 CHURCH RD, CALLAHAN

BLD DATE		LGL DATE	
XF DATE		LAND DATE	
INC DATE		AG DATE	

VALUATION SUMMARY

VALUATION BY		STANDARD
Tax Group: 6	Tax Dist:	
BUILDING MARKET VALUE		394,519
TOTAL MARKET OB/XF VALUE		46,500
TOTAL LAND VALUE - MARKET		35,000
TOTAL MARKET VALUE		476,019
SOH/AGL Deduction		0
ASSESSED VALUE		476,019
TOTAL EXEMPTION VALUE	HX HB	50,000
BASE TAXABLE VALUE		426,019
TOTAL JUST VALUE		476,019
NCON VALUE		441,019
INCOME VALUE		
PREVIOUS YEAR MKT VALUE		47,000

PERMIT NUM	DESCRIPTION	AMT	ISSUED

SALES DATA

OFF RECORD Number	DATE	TYPE INST	Q / U	V / I	RSN CD	SALE PRICE
2508/1399	10/27/2021	WD	U	I	11	100
GRANTOR: RITTER ROBYN L F/K/A						
GRANTEE: BROWN VERLON M & HA						
1207/1153	2/11/2004	WD	U	I	01	42,500
GRANTOR: BROWN ELMEDA H L/E						
GRANTEE: BROWN ROBYN L						

BUILDING NOTES

BUILDING DIMENSIONS

BAS=[YR=2024;ORIG=50,10] E20 S20 W20 N20 $
PTO=[YR=2024;ORIG=50,30] E20 S4 W20 N4 $
.

EXTRA FEATURES

LN	OB/XF CODE	DESCRIPTION	BLD	CAP	L	W	UNITS	UT	Adj R	ADJ UNIT PRICE	ORIG COND	YEAR ON	YEAR ACTUAL	Q	% COND	OB/XF MKT VALUE	NOTES

LAND DESCRIPTION

TOTAL OB/XF 0

LN	USE CODE	CLS	LAND USE DESCRIPTION	CAP	RD	LOC ZONE	FRONT	DEPTH	TOT LND UTS	UNIT TYPE	DT	DPTH FACT	% COND	TOT ADJ	UNIT PRICE	ADJ UNIT PRICE	LAND VALUE	OTHER ADJUSTMENTS AND NOTES	YEAR	DENSITY	DECL	FRZ	YR	CONSRV

REVIEW DATE 08/01/2023 BY KW Total Acres: 1.00 Total Land Value: 35,000 Market: 0 Agricultural: 0 Common: 35,000 PRINTED 08/06/2024 BY SYS