LOT 5
JONES EST PB 7/39

DILL TODD & JAMIE
54324 CRAVEY RD
CALLAHAN, FL 32011

2024

03-1N-25-0976-0005-0000

BUILDING CHARACTERISTICS

ELEMENT	CD	CONSTRUCTION
Exterior Wall	20	FACE BRICK 100
Roof Structur	03	GABLE/HIP 100
Roof Cover	03	COMP SHNGL 100
Interior Wall	05	DRYWALL 100
Interior Floo	11	CLAY TILE 70
Interior Floo	13	LVT/LAMNT 30
Air Condition	03	CENTRAL 100
Heating Type	04	AIR DUCTED 100
Bedrooms		3 100
Bathrooms		2 100
Frame	02	WOOD FRAME 100
Stories	1.	1. 100
Units		0 100
Occupancy	00	NONE 100
Quality	03	Quality Level 03
DOR CODE	0100	SINGLE FAMILY
MAP NUM		MKT AREA 08
NEIGHBORHOOD/LOC	8024.00	

AREA TYPE	TOTAL GROSS AREA	PCT OF BASE	TOT ADJ AREA	SUBAREA MARKET VALUE
BAS	2,345	100	2,345	272,243
FGR	528	55	290	33,667
FOP	70	30	21	2,438
UDG	625	55	344	39,937
UDU	64	55	35	4,063
UOP	338	20	68	7,894
TOTALS	3,970		3,103	360,242

MARKET ADJUSTMENTS

TYPE	MDL	EFF. AREA	TOT ADJ PTS	EFF. BASE RATE	REPL. COST NEW	AYB	EYB	ECON	FNCT		NORM	% COND
0900	01	3,103	106.4440	133.06	412,885	2006	2006	0	0	0	12.75	87.25

1 SNGL FAM – 100% - 2021 Heated Area: 2345 HX Base Yr 2021

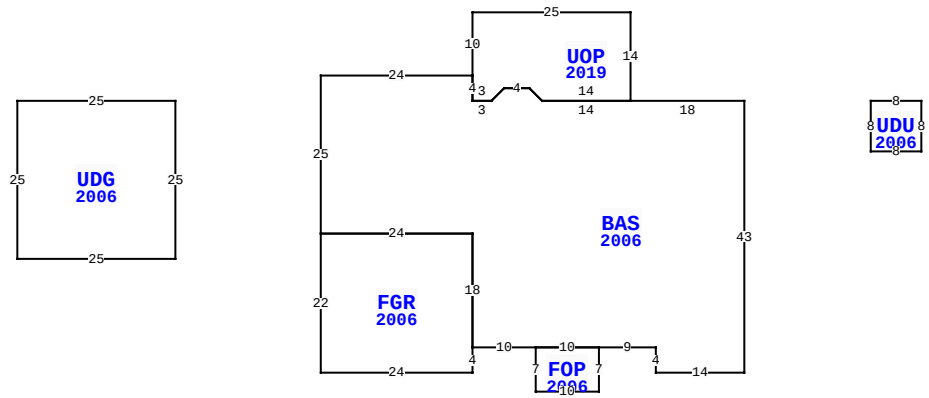

54324 CRAVEY RD, CALLAHAN

BLD DATE	01/24/2007 RK	LGL DATE	
XF DATE		LAND DATE	
INC DATE		AG DATE	

NASSAU COUNTY PROPERTY

PAGE 1 of 1 6

VALUATION SUMMARY

VALUATION BY		STANDARD
Tax Group: 6	Tax Dist:	
BUILDING MARKET VALUE		360,242
TOTAL MARKET OB/XF VALUE		14,432
TOTAL LAND VALUE - MARKET		60,000
TOTAL MARKET VALUE		434,674
SOH/AGL Deduction		130,062
ASSESSED VALUE		304,612
TOTAL EXEMPTION VALUE	HX HB	50,000
BASE TAXABLE VALUE		254,612
TOTAL JUST VALUE		434,674
NCON VALUE		0
INCOME VALUE		
PREVIOUS YEAR MKT VALUE		419,750

PERMIT NUM	DESCRIPTION	AMT	ISSUED
B17757	GARAGE	24,000	05/15/2006
B17757	GARAGE	24,000	05/15/2006
R09299	REPAIR/RRF	2,400	05/01/2006
M10609	MECH OTHER	0	11/01/2005
C16027	CO ISSUED	165,932	09/01/2005
B16027	NEW CONSTR	165,932	09/01/2005

SALES DATA

OFF RECORD Number	DATE	TYPE INST	Q / U	V / I	RSN CD	SALE PRICE
2353/0855	4/09/2020	WD	Q	I	01	345,000
GRANTOR: SIBLEY MICHAEL SHANE						
GRANTEE: DILL TODD & JAMIE (						
2299/1781	8/22/2019	WD	Q	I	01	307,000
GRANTOR: LOCKE CHAD & TANYA (H						
GRANTEE: SIBLEY MICHAEL SHAN						

BUILDING NOTES

BUILDING DIMENSIONS

BAS=[YR=2006] W18 UOP=[YR=2019] N14 W25 S10 S4 E3 U2 R2 E4 D2 R2 E14 $ W14 U2 L2 W4 D2 L2 W3 N4 W24 S25 FGR=[YR=2006] S22 E24 N4 N18 W24 $ E24 S18 E10 FOP=[YR=2006] S7 E10 N7 W10 $ E10 E9 S4 E14 N43 $ PTR= E20 UDU=[YR=2006] E8 S8 W8 N8 $ W20 $ PTR= W90 UDG=[YR=2006] W25 S25 E25 N25 $ E90 $.

EXTRA FEATURES

LN	OB/XF CODE	DESCRIPTION	BLD	CAP	L	W	UNITS	UT	Adj R	ADJ UNIT PRICE	ORIG COND	YEAR ON	YEAR ACTUAL	Q	% COND	OB/XF MKT VALUE	NOTES
1	0500	FP-PRE FAB	0	100	0	0	1.00	UT	3,500.00	3,500.00	100	2006	2006	3	90	3,150	
2	0812	CONCRETE C	0	100	0	0	3,242.00	SF	4.00	4.00	100	2006	2006	3	87	11,282	

LAND DESCRIPTION

TOTAL OB/XF 14,432

LN	USE CODE	CLS	LAND USE DESCRIPTION	CAP	RD	LOC ZONE	FRONT	DEPTH	TOT LND UTS	UNIT TYPE	DT	DPTH FACT	% COND	TOT ADJ	UNIT PRICE	ADJ UNIT PRICE	LAND VALUE	OTHER ADJUSTMENTS AND NOTES	YEAR	DENSITY	DECL	FRZ	YR	CONSRV
1	000100	C	SFR	100	0006	OR	0.00	0.00	1.00	LT		1.00	1.00	1.00	60,000.00	60,000.00	60,000							

REVIEW DATE 07/25/2022 BY KBA Total Acres: 0.00 Total Land Value: 60,000 Market: 0 Agricultural: 0 Common: 60,000 PRINTED 08/06/2024 BY SYS