LOT 21
LITTLE DUNES PHASE #2 PB 5/365

**GALLAGHER DANIEL J & MARION**
21 LITTLE DUNES CIRCLE
FERNANDINA BEACH, FL 32034

**2024**

**02-6N-29-DCLO-0021-0000**

## BUILDING CHARACTERISTICS

| ELEMENT | CD | CONSTRUCTION |
|---|---|---|
| Exterior Wall | 10 | ABOVE AVG 100 |
| Roof Structur | 03 | GABLE/HIP 100 |
| Roof Cover | 03 | COMP SHNGL 100 |
| Interior Wall | 05 | DRYWALL 100 |
| Interior Floo | 12 | HARDWOOD 60 |
| Interior Floo | 14 | CARPET 40 |
| Air Condition | 03 | CENTRAL 100 |
| Heating Type | 04 | AIR DUCTED 100 |
| Bedrooms | | 3 100 |
| Bathrooms | | 3 100 |
| Frame | 02 | WOOD FRAME 100 |
| Stories | 2. | 2. 100 |
| Units | | 0 100 |
| Quality | 05 | Quality Level 05 |
| DOR CODE | 0100 | SINGLE FAMILY |
| MAP NUM | | MKT AREA 10 |
| NEIGHBORHOOD/LOC | 10003.010 | |

| AREA TYPE | TOTAL GROSS AREA | PCT OF BASE | TOT ADJ AREA | SUBAREA MARKET VALUE |
|---|---|---|---|---|
| BAS | 1,198 | 100 | 1,198 | 233,864 |
| FOP | 112 | 30 | 34 | 6,638 |
| FSP | 110 | 40 | 44 | 8,589 |
| FUS | 898 | 100 | 898 | 175,301 |
| FUS | 328 | 100 | 328 | 64,030 |
| UDC | 273 | 25 | 68 | 13,274 |
| UOP | 8 | 20 | 2 | 391 |
| UOP | 8 | 20 | 2 | 391 |
| UST | 50 | 45 | 22 | 4,294 |
| TOTALS | 2,985 | | 2,596 | 506,772 |

## MARKET ADJUSTMENTS

| TYPE | MDL | EFF. AREA | TOT ADJ PTS | EFF. BASE RATE | REPL. COST NEW | AYB | EYB | ECON | FNCT | | NORM | % COND |
|---|---|---|---|---|---|---|---|---|---|---|---|---|
| 0500 | 11 | 2,596 | 146.2272 | 219.34 | 569,407 | 1999 | 2000 | 0 | 0 | 0 | 11.00 | 89.00 |

1 SFR CUST – 100% - 2022 Heated Area: 2424 HX Base Yr 2022

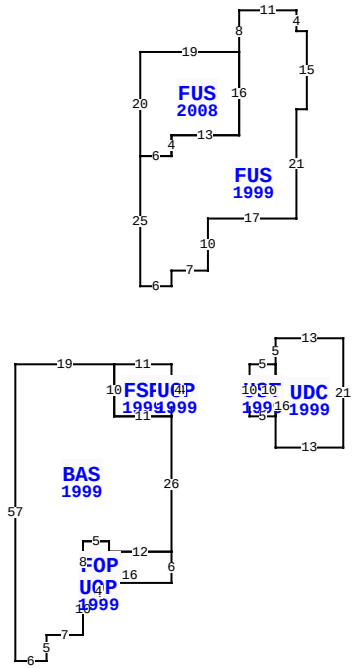


| | | | |
|---|---|---|---|
| BLD DATE | | LGL DATE | |
| XF DATE | | LAND DATE | 04/10/2024 MLU |
| INC DATE | | AG DATE | |

21 LITTLE DUNES CIR, FERNANDINA BEACH

## NASSAU COUNTY PROPERTY

PAGE 1 of 1 5

### VALUATION SUMMARY

| | | |
|---|---|---|
| VALUATION BY | | STANDARD |
| Tax Group: 5 | Tax Dist: | |
| BUILDING MARKET VALUE | | 506,772 |
| TOTAL MARKET OB/XF VALUE | | 7,164 |
| TOTAL LAND VALUE - MARKET | | 350,000 |
| TOTAL MARKET VALUE | | 863,936 |
| SOH/AGL Deduction | | 342,164 |
| ASSESSED VALUE | | 521,772 |
| TOTAL EXEMPTION VALUE | HX HB | 50,000 |
| BASE TAXABLE VALUE | | 471,772 |
| TOTAL JUST VALUE | | 863,936 |
| NCON VALUE | | 0 |
| INCOME VALUE | | |
| PREVIOUS YEAR MKT VALUE | | 791,425 |

| PERMIT NUM | DESCRIPTION | AMT | ISSUED |
|---|---|---|---|
| B20773 | ADDITION | 37,000 | 11/01/2007 |
| B9805067 | NEW CONSTR | 7,875 | 06/01/1998 |
| B9805070 | NEW CONSTR | 140,000 | 06/01/1998 |

## SALES DATA

| OFF RECORD Number | DATE | TYPE INST | Q U | V I | RSN CD | SALE PRICE |
|---|---|---|---|---|---|---|
| 2463/1549 | 5/21/2021 | WD | Q | I | 02 | 820,000 |
| GRANTOR: LATSON LARRY ALLEN & | | | | | | |
| GRANTEE: GALLAGHER DANIEL J | | | | | | |
| 2225/1633 | 9/20/2018 | WD | Q | I | 02 | 650,000 |
| GRANTOR: BUHLER H DIANE LIVING | | | | | | |
| GRANTEE: LATSON LARRY ALLEN | | | | | | |

## BUILDING NOTES

## BUILDING DIMENSIONS

FSP=[YR=1999] W11 BAS=[YR=1999] W19 S57 E6 N5 E7 N10
FOP=[YR=1999] E1 UOP=[YR=1999] S2 E4 N2 W4 $ E16 N6 W12 N2
W5 S8 $ N8 E5 S2 E12 N26 W11 N10 $ S10 E11 N3 UOP=[YR=1999]
E2 N4 W2 S4 $ N7 $ PTR= N15 FUS=[YR=1999] N3 E7 N10 E17 N21
E2 N15 W2 N4 W11 S8 FUS=[YR=2008] W19 S20E6 N4 E13 N16$ S16
W13 S4 W6 S25 E6 $ S15 $ PTR= E15 UST=[YR=1999] E5
UDC=[YR=1999] N5 E13 S21 W13 N16 $ S10 W5 N10 $W15 $ .

## EXTRA FEATURES

| LN | OB/XF CODE | DESCRIPTION | BLD | CAP | L | W | UNITS | UT | Adj R | ADJ UNIT PRICE | ORIG COND | YEAR ON | YEAR ACTUAL | Q | % COND | OB/XF MKT VALUE | NOTES |
|---|---|---|---|---|---|---|---|---|---|---|---|---|---|---|---|---|---|
| 1 | 0504 | FP-ELECTRI | 0 | 100 | 0 | 0 | 1.00 | UT | 2,000.00 | 2,000.00 | 100 | 1999 | 1999 | 3 | 83 | 1,660 | |
| 2 | 0810 | CONCRETE A | 0 | 100 | 0 | 0 | 275.00 | SF | 6.50 | 6.50 | 100 | 1999 | 1999 | 3 | 77 | 1,376 | |
| 3 | 0825 | BRICK | 0 | 100 | 0 | 0 | 195.00 | SF | 12.50 | 12.50 | 100 | 1999 | 1999 | 3 | 93 | 2,267 | |
| 4 | 0810 | CONCRETE A | 0 | 100 | 8 | 4 | 32.00 | SF | 6.50 | 6.50 | 100 | 1996 | 1996 | 3 | 72 | 150 | |
| 5 | 1242 | WD DECK A | 0 | 100 | 0 | 0 | 152.00 | SF | 10.00 | 10.00 | 100 | 1999 | 1999 | 3 | 20 | 304 | |
| 6 | 0300 | BOAT DCK W | 0 | 100 | 8 | 12 | 96.00 | SF | 40.00 | 40.00 | 100 | 1999 | 1999 | 3 | 27 | 1,037 | |
| 7 | 1075 | TRELLIS G | 0 | 100 | 6 | 5 | 30.00 | SF | 35.00 | 35.00 | 100 | 1999 | 1999 | 3 | 27 | 284 | |
| 8 | 1242 | WD DECK A | 0 | 100 | 3 | 3 | 9.00 | SF | 10.00 | 10.00 | 100 | 1999 | 1999 | 3 | 20 | 18 | |
| 9 | 0441 | STK FNC 4' | 0 | 100 | 0 | 0 | 42.00 | LF | 6.50 | 6.50 | 100 | 1999 | 1999 | 3 | 20 | 55 | |
| 10 | 0441 | STK FNC 4' | 0 | 100 | 0 | 0 | 10.00 | LF | 6.50 | 6.50 | 100 | 1999 | 1999 | 3 | 20 | 13 | |

## LAND DESCRIPTION

TOTAL OB/XF 7,164

| LN | USE CODE | CLS | LAND USE DESCRIPTION | CAP | RD | LOC ZONE | FRONT | DEPTH | TOT LND UTS | UNIT TYPE | DT | DPTH FACT | % COND | TOT ADJ | UNIT PRICE | ADJ UNIT PRICE | LAND VALUE | OTHER ADJUSTMENTS AND NOTES | YEAR | DENSITY | DECL | FRZ | YR | CONSRV |
|---|---|---|---|---|---|---|---|---|---|---|---|---|---|---|---|---|---|---|---|---|---|---|---|---|
| 1 | 000100 | C | SFR | 100 | | PUD | 0.00 | 0.00 | 1.00 | LT | | 1.00 | 1.00 | 1.00 | 350,000.00 | 350,000.00 | 350,000 | | | | | | | |

REVIEW DATE 05/12/2019 BY KBA Total Acres: 0.00 Total Land Value: 350,000 Market: 0 Agricultural: 0 Common: 350,000 PRINTED 08/06/2024 BY SYS