LOT 13 IN OR 951/1333
LITTLE DUNES #4 PB 6/146

BURN STANLEY B & LYNN M
13 LITTLE DUNES CIR
FERNANDINA BEACH, FL 32034

2024

02-6N-29-DCLO-0013-0000

BUILDING CHARACTERISTICS

ELEMENT	CD	CONSTRUCTION
Exterior Wall	10	ABOVE AVG 100
Roof Structur	03	GABLE/HIP 100
Roof Cover	03	COMP SHNGL 100
Interior Wall	05	DRYWALL 100
Interior Floo	12	HARDWOOD 50
Interior Floo	14	CARPET 50
Air Condition	03	CENTRAL 100
Heating Type	04	AIR DUCTED 100
Bedrooms		3 100
Bathrooms		3 100
Frame	02	WOOD FRAME 100
Stories	2.	2. 100
Units		0 100
Quality	05	Quality Level 05
DOR CODE	0100	SINGLE FAMILY
MAP NUM		MKT AREA 10
NEIGHBORHOOD/LOC	10003.010	

AREA TYPE	TOTAL GROSS AREA	PCT OF BASE	TOT ADJ AREA	SUBAREA MARKET VALUE
BAS	1,198	100	1,198	239,803
FOP	112	30	34	6,806
FSP	110	40	44	8,807
FUS	910	100	910	182,155
UCP	273	20	55	11,009
UOP	6	20	1	200
UOP	6	20	1	200
UST	20	45	9	1,801
UST	40	45	18	3,603
TOTALS	2,675		2,270	454,386

MARKET ADJUSTMENTS

TYPE	MDL	EFF. AREA	TOT ADJ PTS	EFF. BASE RATE	REPL. COST NEW	AYB	EYB	ECON	FNCT		NORM	% COND
0500	11	2,270	149.9400	224.91	510,546	2000	2000	0	0	0	11.00	89.00

1 SFR CUST – 100% - 2023 Heated Area: 2108 HX Base Yr 2023

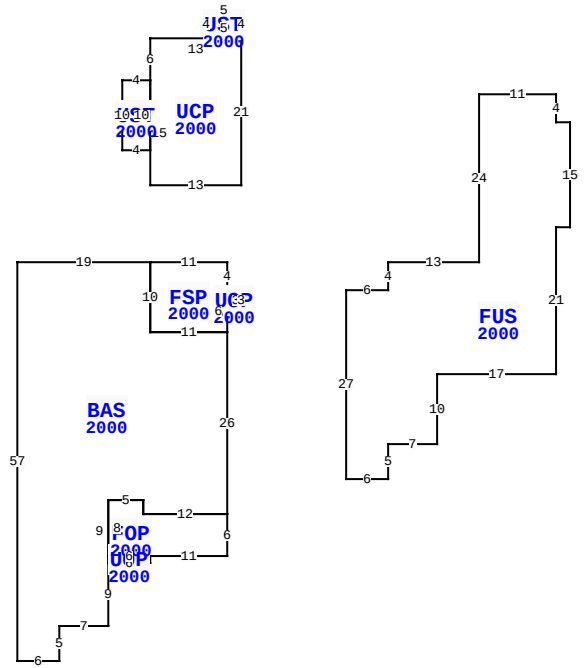

13 LITTLE DUNES CIR, FERNANDINA BEACH

BLD DATE		LGL DATE	
XF DATE		LAND DATE	04/10/2024 MLU
INC DATE		AG DATE	

NASSAU COUNTY PROPERTY

PAGE 1 of 1 5

VALUATION SUMMARY

VALUATION BY		STANDARD
Tax Group: 5	Tax Dist:	
BUILDING MARKET VALUE		454,386
TOTAL MARKET OB/XF VALUE		8,310
TOTAL LAND VALUE - MARKET		350,000
TOTAL MARKET VALUE		812,696
SOH/AGL Deduction		47,942
ASSESSED VALUE		764,754
TOTAL EXEMPTION VALUE	HX HB	50,000
BASE TAXABLE VALUE		714,754
TOTAL JUST VALUE		812,696
NCON VALUE		0
INCOME VALUE		
PREVIOUS YEAR MKT VALUE		742,480

PERMIT NUM	DESCRIPTION	AMT	ISSUED
B007212	CARPORT	5,000	06/01/2000
B9906689	NEW CONSTR	150,000	12/01/1999

SALES DATA

OFF RECORD Number	DATE	TYPE INST	Q / U	V / I	RSN CD	SALE PRICE
0951/1333	9/29/2000	WD	Q	I		415,000

GRANTOR: DUNES CLUB COMPANY II

GRANTEE: BURN STANLEY B & LY

BUILDING NOTES

BUILDING DIMENSIONS

UOP=[YR=2000] W2 FSP=[YR=2000] N4 W11 BAS=[YR=2000] W19 S57 E6 N5 E7 N9 UOP=[YR=2000] E6 N1 FOP=[YR=2000] E11 N6 W12 N2 W5 S8 E6 $ W6 S1 $ N9 E5 S2 E12 N26 W11 N10 $ S10 E11 N6 $ S3 E2 N3 $ PTR= E15 FUS=[YR=2000] E6 N4 E13 N24 E11 S4 E2 S15 W2 S21 W17 S10 W7 S5 W6 N27 $ W15 $ PTR= N15 UCP=[YR=2000] N21 UST=[YR=2000] N4 W5 S4 E5 $ W13 S6 UST=[YR=2000] W4 S10 E4 N10 $ S15 E13 $ S15 $.

EXTRA FEATURES

LN	OB/XF CODE	DESCRIPTION	BLD	CAP	L	W	UNITS	UT	Adj R	ADJ UNIT PRICE	ORIG COND	YEAR ON	YEAR ACTUAL	Q	% COND	OB/XF MKT VALUE	NOTES
1	0504	FP-ELECTRI	0	100	0	0	1.00	UT	2,000.00	2,000.00	100	2000	2000	3	84	1,680	
2	0810	CONCRETE A	0	100	0	0	361.00	SF	6.50	6.50	100	2000	2000	3	79	1,854	
3	0825	BRICK	0	100	0	0	248.00	SF	12.50	12.50	100	2000	2000	3	94	2,914	
4	0810	CONCRETE A	0	100	6	4	24.00	SF	6.50	6.50	100	2000	2000	3	79	123	
5	1242	WD DECK A	0	100	0	0	151.00	SF	10.00	10.00	100	2000	2000	3	20	302	
6	0300	BOAT DCK W	0	100	12	8	96.00	SF	40.00	40.00	100	2000	2000	3	28	1,075	
7	0810	CONCRETE A	0	100	0	0	53.00	SF	6.50	6.50	100	2000	2000	3	79	272	
8	0441	STK FNC 4'	0	100	0	0	69.00	LF	6.50	6.50	100	2000	2000	3	20	90	

LAND DESCRIPTION

TOTAL OB/XF 8,310

LN	USE CODE	CLS	LAND USE DESCRIPTION	CAP	RD	LOC ZONE	FRONT	DEPTH	TOT LND UTS	UNIT TYPE	DT	DPTH FACT	% COND	TOT ADJ	UNIT PRICE	ADJ UNIT PRICE	LAND VALUE	OTHER ADJUSTMENTS AND NOTES	YEAR	DENSITY	DECL	FRZ	YR	CONSRV
1	000140	C	SFR GOLF A	100		PUD	0.00	0.00	1.00	LT		1.00	1.00	1.00	350,000.00	350,000.00	350,000							

REVIEW DATE 05/12/2019 BY KBA Total Acres: 0.00 Total Land Value: 350,000 Market: 0 Agricultural: 0 Common: 350,000 PRINTED 08/06/2024 BY SYS