LOT 6
IN OR 881/1244
LITTLE DUNES PHASE #2 PB 5/365

COLEN LIJANA R TRUSTEE/LIJANE R COLEN REVOCABLE TR
6 LITTLE DUNES CIRCLE
FERNANDINA BEACH, FL 32034

2024

02-6N-29-DCLO-0006-0000

BUILDING CHARACTERISTICS

ELEMENT	CD	CONSTRUCTION
Exterior Wall	10	ABOVE AVG 100
Roof Structur	03	GABLE/HIP 100
Roof Cover	03	COMP SHNGL 100
Interior Wall	05	DRYWALL 100
Interior Floo	12	HARDWOOD 50
Interior Floo	14	CARPET 50
Air Condition	03	CENTRAL 100
Heating Type	04	AIR DUCTED 100
Bedrooms		3 100
Bathrooms		3 100
Frame	02	WOOD FRAME 100
Stories	2.	2. 100
Units		0 100
Quality	05	Quality Level 05

DOR CODE 0100 SINGLE FAMILY
MAP NUM | MKT AREA 10
NEIGHBORHOOD/LOC 10003.010

AREA TYPE	TOTAL GROSS AREA	PCT OF BASE	TOT ADJ AREA	SUBAREA MARKET VALUE
BAS	1,197	100	1,197	232,873
FOP	112	30	34	6,615
FSP	110	40	44	8,560
FUS	949	100	949	184,626
UDC	273	25	68	13,229
UOP	18	20	4	779
UST	24	45	11	2,140
UST	40	45	18	3,502
TOTALS	2,723		2,325	452,322

MARKET ADJUSTMENTS

TYPE	MDL	EFF. AREA	TOT ADJ PTS	EFF. BASE RATE	REPL. COST NEW	AYB	EYB	ECON	FNCT		NORM	% COND
0500	11	2,325	149.9400	224.91	522,916	1995	1995	0	0	0	13.50	86.50

1 SFR CUST – 100% - 2021 Heated Area: 2146 HX Base Yr 2021

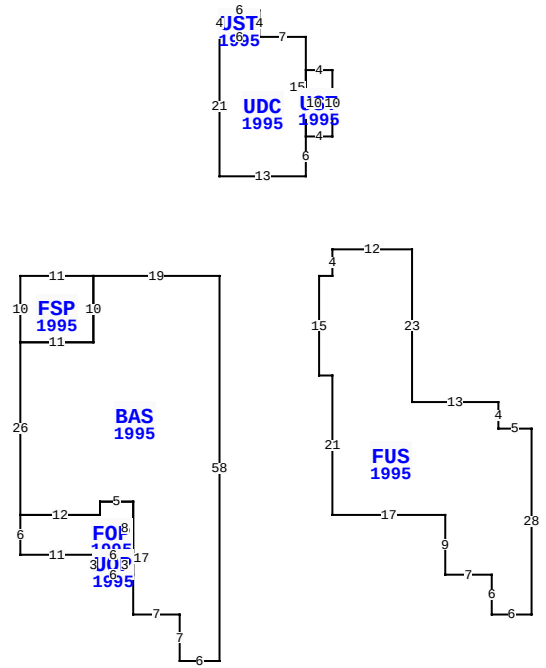

6 LITTLE DUNES CIR, FERNANDINA BEACH

BLD DATE		LGL DATE	
XF DATE		LAND DATE	04/10/2024 MLU
INC DATE		AG DATE	

NASSAU COUNTY PROPERTY

PAGE 1 of 1 5

VALUATION SUMMARY

VALUATION BY		STANDARD
Tax Group: 5	Tax Dist:	
BUILDING MARKET VALUE		452,322
TOTAL MARKET OB/XF VALUE		6,451
TOTAL LAND VALUE - MARKET		350,000
TOTAL MARKET VALUE		808,773
SOH/AGL Deduction		260,466
ASSESSED VALUE		548,307
TOTAL EXEMPTION VALUE	HX HB	50,000
BASE TAXABLE VALUE		498,307
TOTAL JUST VALUE		808,773
NCON VALUE		0
INCOME VALUE		
PREVIOUS YEAR MKT VALUE		738,726

PERMIT NUM	DESCRIPTION	AMT	ISSUED
M1217491	H/AC	0	08/01/2012
B9401469	GARAGE	4,862	12/01/1994
B9401467	NEW CONSTR	70,335	11/01/1994

SALES DATA

OFF RECORD Number	DATE	TYPE INST	Q / U	V / I	RSN CD	SALE PRICE
0881/1244	5/05/1999	WD	U	I	01	100
GRANTOR: COLEN BRADFORD E & LI						
GRANTEE: COLEN LIJANA R TRUS						
0740/0401	9/27/1995	WD	Q	I		293,500
GRANTOR: DUNES CLUB COMPANY II						
GRANTEE: COLEN BRADFORD E &						

BUILDING NOTES

BUILDING DIMENSIONS

BAS=[YR=1995] W19 FSP=[YR=1995] W11 S10 E11 N10$ S10 W11 S26 FOP=[YR=1995] S6 E11 UOP=[YR=1995] S3 E6 N3 W6$ E6 N8 W5 S2 W12$ E12 N2 E5 S17 E7 S7 E6 N58$ PTR=E15 FUS=[YR=1995] E2 N4 E12 S23 E13 S4E5 S28 W6 N6 W7 N9 W17 N21 W2 N15$ W15$ PTR=N15 UDC=[YR=1995] E13 N6 UST=[YR=1995] E4 N10 W4 S10$ N15 W7 UST=[YR=1995] N4 W6 S4 E6$ W6 S21$ S15$.

EXTRA FEATURES

LN	OB/XF CODE	DESCRIPTION	BLD	CAP	L	W	UNITS	UT	Adj R	ADJ UNIT PRICE	ORIG COND	YEAR ON	YEAR ACTUAL	Q	% COND	OB/XF MKT VALUE	NOTES
1	0504	FP-ELECTRI	0	100	0	0	1.00	UT	2,000.00	2,000.00	100	1995	1995	3	77	1,540	
2	0810	CONCRETE A	0	100	0	0	258.00	SF	6.50	6.50	100	1995	1995	3	70	1,174	
3	0810	CONCRETE A	0	100	24	4	96.00	SF	6.50	6.50	100	1995	1995	3	70	437	
4	0825	BRICK	0	100	0	0	266.00	SF	12.50	12.50	100	1995	1995	3	91	3,026	
5	1075	TRELLIS G	0	100	5	5	25.00	SF	35.00	35.00	100	1995	1995	3	23	201	
6	0441	STK FNC 4'	0	100	0	0	32.00	LF	6.50	6.50	100	1995	1995	3	20	42	
7	0441	STK FNC 4'	0	100	0	0	24.00	LF	6.50	6.50	100	1996	1996	3	20	31	

LAND DESCRIPTION

TOTAL OB/XF 6,451

LN	USE CODE	CLS	LAND USE DESCRIPTION	CAP	RD	LOC ZONE	FRONT	DEPTH	TOT LND UTS	UNIT TYPE	DT	DPTH FACT	% COND	TOT ADJ	UNIT PRICE	ADJ UNIT PRICE	LAND VALUE	OTHER ADJUSTMENTS AND NOTES	YEAR	DENSITY	DECL	FRZ	YR	CONSRV
1	000100	C	SFR	100		PUD	0.00	0.00	1.00	LT		1.00	1.00	1.00	350,000.00	350,000.00	350,000							

REVIEW DATE 05/12/2019 BY KBA Total Acres: 0.00 Total Land Value: 350,000 Market: 0 Agricultural: 0 Common: 350,000 PRINTED 08/06/2024 BY SYS