LOTS 3 & 4
DUNES ROW REPLAT PB 5/170

TURNER CATHERINE M &/HIGHLANDS DYNASTY TRUST
24 DUNES ROW
FERNANDINA BEACH, FL 32034

2024

02-6N-29-0390-0003-0000

BUILDING CHARACTERISTICS

ELEMENT	CD	CONSTRUCTION
Exterior Wall	17	CB STUCCO 80
Exterior Wall	10	ABOVE AVG 20
Roof Structur	08	IRREGULAR 100
Roof Cover	08	CLAY TILE 50
Roof Cover	11	SLATE 50
Interior Wall	05	DRYWALL 100
Interior Floo	12	HARDWOOD 80
Interior Floo	14	CARPET 20
Air Condition	03	CENTRAL 100
Heating Type	04	AIR DUCTED 100
Bedrooms		4 100
Bathrooms		5 100
Frame	03	MASONRY 100
Stories	3.	3. 100
Units		0 100
Quality	06	Quality Level 06
DOR CODE	0100	SINGLE FAMILY
MAP NUM		MKT AREA 10
NEIGHBORHOOD/LOC	10003.00	

AREA TYPE	TOTAL GROSS AREA	PCT OF BASE	TOT ADJ AREA	SUBAREA MARKET VALUE
BAL	20	15	3	958
BAL	20	15	3	958
BAL	28	15	4	1,278
BAL	32	15	5	1,597
BAL	104	15	16	5,111
BAS	2,344	100	2,344	748,726
FBM	782	80	626	199,959
FGR	720	55	396	126,491
FOP	63	30	19	6,069
FOP	63	30	19	6,069
TOTALS	13,607		9,866	3,151,422

MARKET ADJUSTMENTS

TYPE	MDL	EFF. AREA	TOT ADJ PTS	EFF. BASE RATE	REPL. COST NEW	AYB	EYB	ECON	FNCT		NORM	% COND
0500	12	9,866	226.2995	339.45	3,349,014	2011	2011	0	0	0	5.90	94.10

1 SFR CUST – 100% - 2012 Heated Area: 8035 HX Base Yr 2012

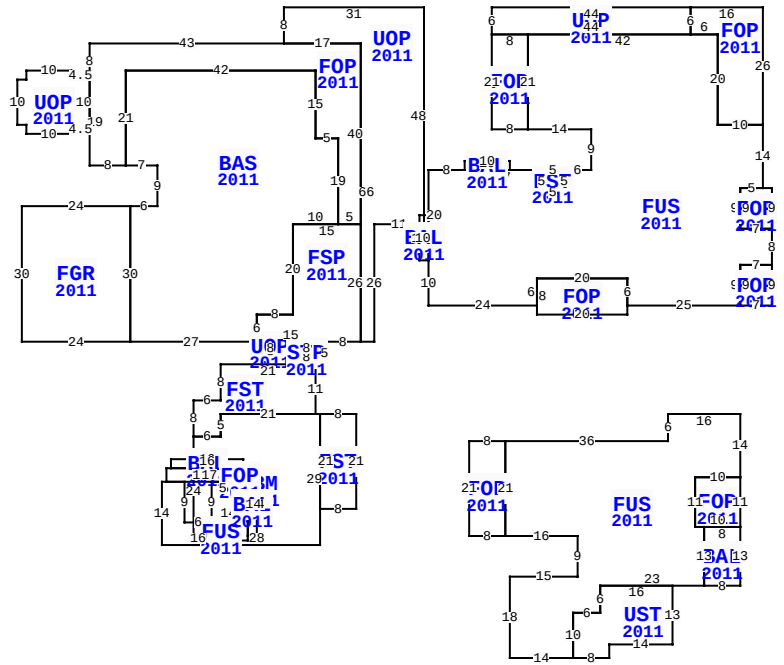

** This building has 30 Sub-Areas

24 DUNES ROW, FERNANDINA BEACH

BLD DATE		LGL DATE	
XF DATE		LAND DATE	04/10/2024 MLU
INC DATE		AG DATE	

NASSAU COUNTY PROPERTY

PAGE 1 of 1 5

VALUATION SUMMARY

VALUATION BY		STANDARD
Tax Group: 5	Tax Dist:	
BUILDING MARKET VALUE		3,151,422
TOTAL MARKET OB/XF VALUE		77,891
TOTAL LAND VALUE - MARKET		2,300,000
TOTAL MARKET VALUE		5,529,313
SOH/AGL Deduction		1,521,916
ASSESSED VALUE		4,007,397
TOTAL EXEMPTION VALUE	HX HB	50,000
BASE TAXABLE VALUE		3,957,397
TOTAL JUST VALUE		5,529,313
NCON VALUE		0
INCOME VALUE		
PREVIOUS YEAR MKT VALUE		5,289,276

PERMIT NUM	DESCRIPTION	AMT	ISSUED
C22716	CO ISSUED	0	03/15/2011
G01534	GAS	7,900	05/01/2010
M15176	MECH OTHER	0	04/01/2010
B23038	SWIM POOL	19,500	11/01/2009
P14018	OTHER	0	11/01/2009
E21990	ELEC OTHER	0	08/01/2009

SALES DATA

OFF RECORD Number	DATE	TYPE INST	Q / U	V / I	RSN CD	SALE PRICE
2475/1286	6/29/2021	QC	U	I	11	100
GRANTOR: TURNER RONALD L						
GRANTEE: HIGHLANDS DYNASTY T						
0856/1007	11/20/1998	WD	U	V		850,000
GRANTOR: AMELIA ISLAND CO						
GRANTEE: TURNER RONALD L & C						

BUILDING NOTES

EXTRA FEATURES

L N	OB/XF CODE	DESCRIPTION	BLD	CAP	L	W	UNITS	UT	Adj R	ADJ UNIT PRICE	ORIG COND	YEAR ON	YEAR ACTUAL	Q	% COND	OB/XF MKT VALUE	NOTES
1	0504	FP-ELECTRI	0	100	0	0	3.00	UT	2,000.00	2,000.00	100	2011	2011	3	94	5,640	
2	0504	FP-ELECTRI	0	100	0	0	1.00	UT	2,000.00	2,000.00	100	2011	2011	3	94	1,880	
3	0410	ELEVATOR	0	100	0	0	1.00	UT	18,000.00	18,000.00	100	2011	2011	3	100	18,000	
4	0855	CONC PAVER	0	100	0	0	3,632.00	SF	10.00	10.00	100	2011	2011	3	92	33,414	
5	1126	CB/STC 8"	0	100	0	0	120.00	SF	8.00	8.00	100	2011	2011	3	92	883	
6	0861	POOL GUNIT	0	100	0	0	286.00	SF	85.00	85.00	100	2011	2011	3	64	15,558	
7	1076	TRELLIS A	0	100	10	6	60.00	SF	22.50	22.50	100	2011	2011	3	64	864	
8	1076	TRELLIS A	0	100	10	8	80.00	SF	22.50	22.50	100	2011	2011	3	64	1,152	
9	0877	JACUZZI	0	100	0	0	1.00	UT	1,000.00	1,000.00	100	2011	2011	3	50	500	

BUILDING DIMENSIONS

UOP=[YR=2011] W31S8FOP=[YR=2011] W43S8 UOP=[YR=2011] U2 L4
W10S2W2S10E2S2 E10 U2 R4 N10$S19E8 BAS=[YR=2011]
E7S9W6FGR=[YR=2011]W24S30E24N30$S30E27 UOP=[YR=2011]S2E8
STP=[YR=2011] S3E8N5 FSP=[YR=2011] E8N26W15S20W8S6E15$W8
S2$N2W8 $E1N6E8N20E10N19W5N15 W42S21$N
21E42S15E5S19E5N40W17$E17S66E3 N26E11N48$PTR=E15
UOP=[YR=2011] E44FOP=[YR=2011]E16S26 FUS=[YR=2011] S14
FOP=[YR=2011] E2S9W7N9E5$W5S9E7S8 FOP=[YR=2011]
S9W7N9E7$W7S9 W25FOP=[YR=2011] S2W20 N8E20S6$N6W20 S6W24N10
BAL=[YR=2011] W2N10E2S10$N20E8 BAL=[YR=2011] E10N2W 10S2$E17
FST=[YR=2011] E5S5W5N5$S5E5 N5E6N9W14FOP=[YR=2011]
W8N21E8S21$N21E42S20 E10$W10N20W6N6$S6W44N6 $W15$

LAND DESCRIPTION

TOTAL OB/XF 77,891

L N	USE CODE	CLS	LAND USE DESCRIPTION	CAP	R D	LOC ZONE	FRONT	DEPTH	TOT LND UTS	UNIT TYPE	D T	DPTH FACT	% COND	TOT ADJ	UNIT PRICE	ADJ UNIT PRICE	LAND VALUE	OTHER ADJUSTMENTS AND NOTES	YEAR	DENSITY	DECL	FRZ	YR	CONSRV
1	000120	C	SFR OCN FT	100		PUD	0.00	0.00	1.00	LT		1.00	1.00	1.00	2,300,000.00	2,300,000.00	2,300,000							

REVIEW DATE 05/12/2019 BY KBA Total Acres: 0.00 Total Land Value: 2,300,000 Market: 0 Agricultural: 0 Common: 2,300,000 PRINTED 08/06/2024 BY SYS