PT OF SEC'S 2 & 3-2N-25
IN OR 1884/1543

DAVIS DANIEL CHES & ASHLEE FAITH
56977 DAVIS RD
CALLAHAN, FL 32011-0082

2024

02-2N-25-0000-0003-0030

NASSAU COUNTY PROPERTY

BUILDING CHARACTERISTICS

ELEMENT	CD	CONSTRUCTION
Exterior Wall	20	FACE BRICK 100
Roof Structur	08	IRREGULAR 100
Roof Cover	03	COMP SHNGL 100
Interior Wall	05	DRYWALL 100
Interior Floo	11	CLAY TILE 60
Interior Floo	14	CARPET 40
Air Condition	03	CENTRAL 100
Heating Type	04	AIR DUCTED 100
Bedrooms		3 100
Bathrooms		3 100
Frame	02	WOOD FRAME 100
Stories	2.	2. 100
Units		0 100
Occupancy	00	NONE 100
Quality	06	Quality Level 06
DOR CODE	5000	IMPROVED AG
MAP NUM		MKT AREA 08
NEIGHBORHOOD/LOC	8026.00	

AREA TYPE	TOTAL GROSS AREA	PCT OF BASE	TOT ADJ AREA	SUBAREA MARKET VALUE
BAS	2,532	100	2,532	348,658
DCK	64	10	6	826
FGR	688	55	378	52,051
FOP	220	30	66	9,088
FOP	279	30	84	11,567
FST	90	55	50	6,886
FUS	1,183	100	1,183	162,900
STP	20	10	2	275
STP	28	10	3	413
STR	60	10	6	826
TOTALS	5,164		4,310	593,490

MARKET ADJUSTMENTS

TYPE	MDL	EFF. AREA	TOT ADJ PTS	EFF. BASE RATE	REPL. COST NEW	AYB	EYB	ECON	FNCT		NORM	% COND
0900	01	4,310	117.1896	146.49	631,372	2015	2015	0	0	0	6.00	94.00

1 SNGL FAM – 100% - 2016 Heated Area: 3715 HX Base Yr 2016

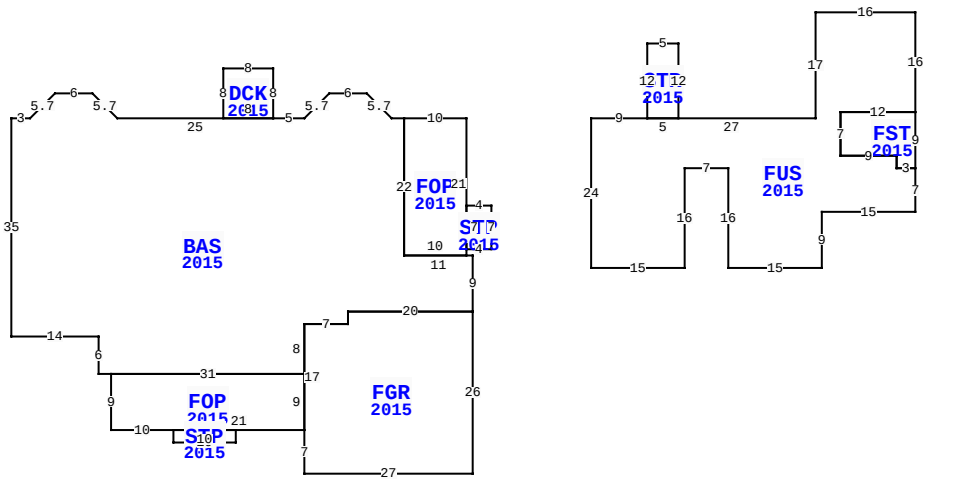

56977 DAVIS RD, CALLAHAN

BLD DATE		LGL DATE	
XF DATE		LAND DATE	05/19/2023 MLU
INC DATE		AG DATE	

NASSAU COUNTY PROPERTY — VALUATION SUMMARY

VALUATION BY	STANDARD
Tax Group: 6	Tax Dist:
BUILDING MARKET VALUE	593,490
TOTAL MARKET OB/XF VALUE	5,029
TOTAL LAND VALUE - MARKET	325,680
TOTAL MARKET VALUE	692,859
SOH/AGL Deduction	349,252
ASSESSED VALUE	343,607
TOTAL EXEMPTION VALUE	HX HB 50,000
BASE TAXABLE VALUE	293,607
TOTAL JUST VALUE	924,199
NCON VALUE	0
INCOME VALUE	
PREVIOUS YEAR MKT VALUE	899,054

PERMIT NUM	DESCRIPTION	AMT	ISSUED
B1429084	CO ISSUED	0	08/28/2015
B1429084	NEW CONSTR	507,602	07/01/2014

SALES DATA

OFF RECORD Number	DATE	TYPE INST	Q U	V I	RSN CD	SALE PRICE
1884/1543	10/09/2013	TD	U	V	11	100

GRANTOR: DAVIS KERRY L & CECIL
GRANTEE: DAVIS DANIEL CHES &

BUILDING NOTES

BUILDING DIMENSIONS

FOP=[YR=2015] W10 BAS=[YR=2015] W2 U4 L4 W6 D4 L4 W5 DCK=[YR=2015] N8 W8 S8 E8$ W25 U4 L4 W6 L4 D4 W3 S35 E14 S6 E2 FOP=[YR=2015] S9 E10 STP=[YR=2015] S2 E10 N2 W10$ E21 FGR=[YR=2015] S7 E27 N26 W20 S2 W7 S17$ N9 W31$ E31 N8 E7 N2 E20 N9 W11 N22$ S22 E10 N1 STP=[YR=2015] E4 N7 W4 S7$ N21$ PTR= E20 FUS=[YR=2015] E9 STR=[YR=2015] N12 E5 S12 W5$ E27 N17 E16 S16 FST=[YR=2015] S9 W3 N2 W9 N7 E12$ W12 S7 E9 S2 E3 S7 W15 S9 W15 N16 W7 S16 W15 N24$W20$.

EXTRA FEATURES

LN	OB/XF CODE	DESCRIPTION	BLD	CAP	L	W	UNITS	UT	Adj R	ADJ UNIT PRICE	ORIG COND	YEAR ON	YEAR ACTUAL	Q	% COND	OB/XF MKT VALUE	NOTES
1	0811	CONCRETE B	0	100	0	0	1,018.00	SF	5.20	5.20	100	2015	2015	3	95	5,029	

LAND DESCRIPTION

TOTAL OB/XF 5,029

LN	USE CODE	CLS	LAND USE DESCRIPTION	CAP	RD	LOC ZONE	FRONT	DEPTH	TOT LND UTS	UNIT TYPE	DT	DPTH FACT	% COND	TOT ADJ	UNIT PRICE	ADJ UNIT PRICE	LAND VALUE	OTHER ADJUSTMENTS AND NOTES	YEAR	DENSITY	DECL	FRZ	YR	CONSRV
1	005000	C	RURAL HOME	100		OR	0.00	0.00	5.48	AC		1.00	1.00	1.00	16,000.00	16,000.00	87,680							
2	006005	A	PAST/GRAZE	0		OR	0.00	0.00	15.00	AC		1.00	1.00	1.00	370.00	370.00	5,550							
3	005500	A	TIMBER 2 SI	0		OR	0.00	0.00	2.00	AC		1.00	1.00	1.00	555.00	555.00	1,110							
4	009910	M	MKT.VAL.AG	0		OR	0.00	0.00	17.00	AC		1.00	1.00	1.00	14,000.00	14,000.00	238,000							

REVIEW DATE 06/03/2021 BY KBA Total Acres: 22.48 Total Land Value: 94,340 Market: 238,000 Agricultural: 6,660 Common: 87,680 PRINTED 08/06/2024 BY SYS