PT OF NE1/4 OF SE1/4
OR 715 PG 184
R498355 & R498356

PURVIS SYDNEY & DEBORAH G
36206 GAGE ROAD
CALLAHAN, FL 32011

2024

02-2N-24-0000-0001-0010

NASSAU COUNTY PROPERTY

BUILDING CHARACTERISTICS

ELEMENT	CD	CONSTRUCTION
Exterior Wall	05	AVERAGE 100
Roof Structur	03	GABLE/HIP 100
Roof Cover	03	COMP SHNGL 100
Interior Wall	04	PLYWOOD 100
Interior Floo	14	CARPET 80
Interior Floo	08	SHT VINYL 20
Air Condition	03	CENTRAL 100
Heating Type	04	AIR DUCTED 100
Bedrooms		3 100
Bathrooms		2 100
Frame	02	WOOD FRAME 100
Stories	1.	1. 100
Units		0 100
Quality	03	Quality Level 03
DOR CODE	5000	IMPROVED AG
MAP NUM		MKT AREA 08
NEIGHBORHOOD/LOC	8001.00	

AREA TYPE	TOTAL GROSS AREA	PCT OF BASE	TOT ADJ AREA	SUBAREA MARKET VALUE
BAS	1,680	100	1,680	41,348
TOTALS	1,680		1,680	41,348

MARKET ADJUSTMENTS

TYPE	MDL	EFF. AREA	TOT ADJ PTS	EFF. BASE RATE	REPL. COST NEW	AYB	EYB	ECON	FNCT		NORM	% COND
0820	02	1,680	117.2000	82.04	137,827	1986	1986	0	0	0	70.00	30.00

2 M/H 93- – 0% - 0 Heated Area: 1680 HX Base Yr

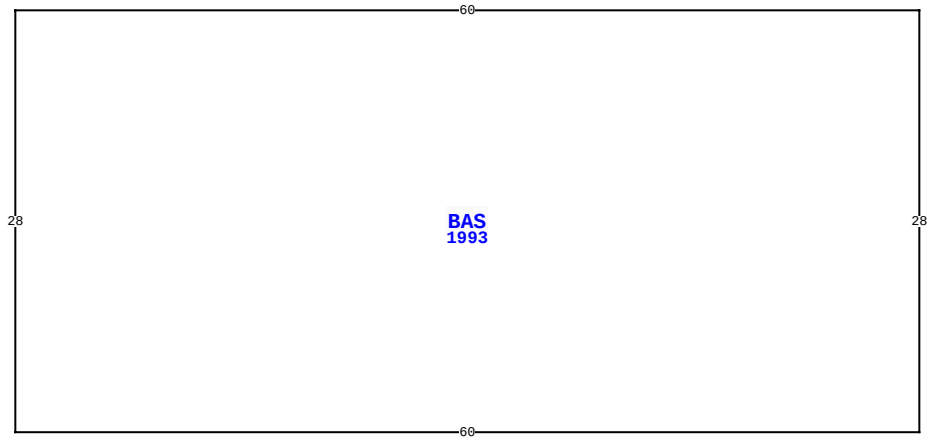

36206 GAGE RD, CALLAHAN

BLD DATE		LGL DATE	
XF DATE		LAND DATE	06/15/2023 MLU
INC DATE		AG DATE	

VALUATION SUMMARY

VALUATION BY		STANDARD
Tax Group: 6	Tax Dist:	
BUILDING MARKET VALUE		458,357
TOTAL MARKET OB/XF VALUE		14,324
TOTAL LAND VALUE - MARKET		260,070
TOTAL MARKET VALUE		535,926
SOH/AGL Deduction		260,087
ASSESSED VALUE		275,839
TOTAL EXEMPTION VALUE	HX HB	50,000
BASE TAXABLE VALUE		225,839
TOTAL JUST VALUE		732,751
NCON VALUE		0
INCOME VALUE		
PREVIOUS YEAR MKT VALUE		712,517

PERMIT NUM	DESCRIPTION	AMT	ISSUED
B12204	NEW CONSTR	0	12/01/2004
E017838	CHNGE SRVC	300	03/01/2001
E951525	NEW CONSTR	2,500	01/01/1995
B94868	H/AC	0	12/01/1994
B941409	NEW CONSTR	96,653	10/01/1994

SALES DATA

OFF RECORD Number	DATE	TYPE INST	Q U	V I	RSN CD	SALE PRICE
0715/0184	9/30/1994	WD	U	I	10	100
GRANTOR: PURVIS JAMES H & LIND						
GRANTEE: PURVIS SYDNEY & DEB						
0712/0310	8/25/1994	PR	U	I	10	0
GRANTOR: SILCOX JAMES & MELISS						
GRANTEE: PURVIS JAMES & LIND						

BUILDING NOTES

BUILDING DIMENSIONS

BAS=[YR=1993] W60 S28 E60 N28 $.

EXTRA FEATURES

LN	OB/XF CODE	DESCRIPTION	BLD	CAP	L	W	UNITS	UT	Adj R	ADJ UNIT PRICE	ORIG COND	YEAR ON	YEAR ACTUAL	Q	% COND	OB/XF MKT VALUE	NOTES
1	0940	SHEDS/PORT	0	100	8	10	80.00	SF	20.10	20.10	100	1989	1989	3	20	322	
2	1242	WD DECK A	0	0	20	10	200.00	SF	10.00	10.00	100	1998	1998	3	20	400	
3	1127	BRICK 8"	0	100	0	0	40.00	SF	11.00	11.00	100	2005	2005	3	96	422	
4	0504	FP-ELECTRI	0	100	0	0	1.00	UT	2,000.00	2,000.00	100	2005	2005	3	89	1,780	
5	0812	CONCRETE C	0	100	0	0	3,314.00	SF	4.00	4.00	100	2005	2005	3	86	11,400	

LAND DESCRIPTION

TOTAL OB/XF 14,324

LN	USE CODE	CLS	LAND USE DESCRIPTION	CAP	RD	LOC ZONE	FRONT	DEPTH	TOT LND UTS	UNIT TYPE	DT	DPTH FACT	% COND	TOT ADJ	UNIT PRICE	ADJ UNIT PRICE	LAND VALUE	OTHER ADJUSTMENTS AND NOTES	YEAR	DENSITY	DECL	FRZ	YR	CONSRV
1	005000	C	RURAL HOME	100	0007	OR	0.00	0.00	1.00	AC		1.00	1.00	1.00	30,000.00	30,000.00	30,000							
2	006000	A	PAST1/HAY	0		OR	0.00	0.00	6.91	AC		1.00	1.00	1.00	370.00	370.00	2,557							
3	005902	A	HARDWOOD SI	0		OR	0.00	0.00	3.62	AC		1.00	1.00	1.00	190.00	190.00	688							
4	009910	M	MKT.VAL.AG	0		OR	0.00	0.00	10.53	AC		1.00	1.00	1.00	19,000.00	19,000.00	200,070							
5	005000	C	RURAL HOME	100	0007	OR	0.00	0.00	1.00	AC		1.00	1.00	1.00	30,000.00	30,000.00	30,000							

REVIEW DATE 07/21/2021 BY TWA Total Acres: 12.53 Total Land Value: 63,245 Market: 200,070 Agricultural: 3,245 Common: 60,000 PRINTED 08/06/2024 BY SYS

PT OF NE1/4 OF SE1/4
OR 715 PG 184
R498355 & R498356

PURVIS SYDNEY & DEBORAH G
36206 GAGE ROAD
CALLAHAN, FL 32011

2024

02-2N-24-0000-0001-0010

BUILDING CHARACTERISTICS

ELEMENT	CD	CONSTRUCTION
Exterior Wall	20	FACE BRICK 100
Roof Structur	08	IRREGULAR 100
Roof Cover	03	COMP SHNGL 100
Interior Wall	05	DRYWALL 100
Interior Floo	13	LVT/LAMNT 90
Interior Floo	11	CLAY TILE 10
Air Condition	03	CENTRAL 100
Heating Type	04	AIR DUCTED 100
Bedrooms		4 100
Bathrooms		4 100
Frame	02	WOOD FRAME 100
Stories	2.	2. 100
Units		0 100
Occupancy	00	NONE 100
Quality	03	Quality Level 03
DOR CODE	5000	IMPROVED AG
MAP NUM		MKT AREA 08
NEIGHBORHOOD/LOC	8001.00	

AREA TYPE	TOTAL GROSS AREA	PCT OF BASE	TOT ADJ AREA	SUBAREA MARKET VALUE
BAS	2,680	100	2,680	300,184
FGR	841	55	463	51,860
FOP	264	30	79	8,849
FSP	312	40	125	14,001
FUS	376	100	376	42,115
TOTALS	4,473		3,723	417,009

MARKET ADJUSTMENTS

TYPE	MDL	EFF. AREA	TOT ADJ PTS	EFF. BASE RATE	REPL. COST NEW	AYB	EYB	ECON	FNCT		NORM	% COND
0900	01	3,723	103.5900	129.49	482,091	2005	2005	0	0	0	13.50	86.50

3 SNGL FAM – 100% - 0 Heated Area: 3056 HX Base Yr

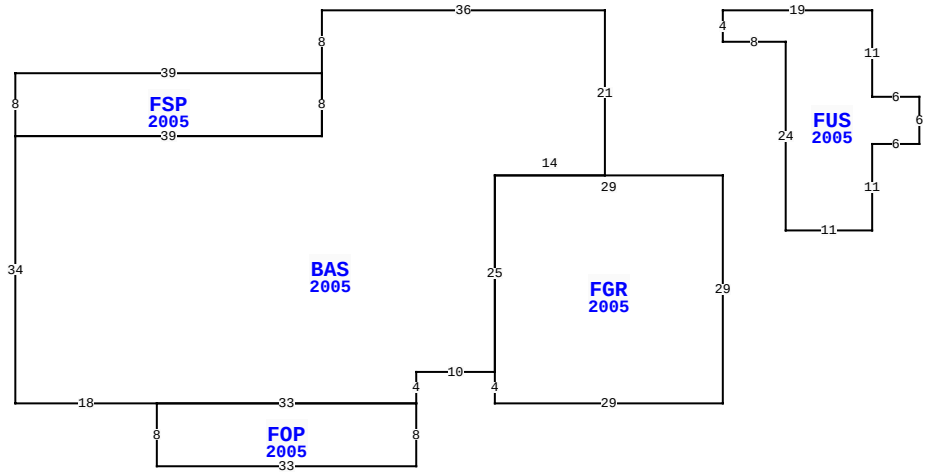

36206 GAGE RD, CALLAHAN

BLD DATE		LGL DATE	
XF DATE		LAND DATE	06/15/2023 MLU
INC DATE		AG DATE	

NASSAU COUNTY PROPERTY

PAGE 2 of 2 6

VALUATION SUMMARY

VALUATION BY		STANDARD
Tax Group: 6	Tax Dist:	
BUILDING MARKET VALUE		458,357
TOTAL MARKET OB/XF VALUE		14,324
TOTAL LAND VALUE - MARKET		260,070
TOTAL MARKET VALUE		535,926
SOH/AGL Deduction		260,087
ASSESSED VALUE		275,839
TOTAL EXEMPTION VALUE	HX HB	50,000
BASE TAXABLE VALUE		225,839
TOTAL JUST VALUE		732,751
NCON VALUE		0
INCOME VALUE		
PREVIOUS YEAR MKT VALUE		712,517

PERMIT NUM	DESCRIPTION	AMT	ISSUED

SALES DATA

OFF RECORD Number	DATE	TYPE INST	Q / U	V / I	RSN CD	SALE PRICE
0715/0184	9/30/1994	WD	U	I	10	100
GRANTOR: PURVIS JAMES H & LIND						
GRANTEE: PURVIS SYDNEY & DEB						
0712/0310	8/25/1994	PR	U	I	10	0
GRANTOR: SILCOX JAMES & MELISS						
GRANTEE: PURVIS JAMES & LIND						

BUILDING NOTES

BUILDING DIMENSIONS

BAS=[YR=2005] W36 S8 FSP=[YR=2005] W39 S8 E39 N8 $ S8 W39
S34 E18 FOP=[YR=2005] S8 E33 N8 W33 $ E33 N4 E10
FGR=[YR=2005] S4 E29 N29 W29 S25 $ N25 E14 N21 $ PTR= E15
FUS=[YR=2005] E19 S11 E6 S6 W6 S11 W11 N24 W8 N4 $ W15 $.

EXTRA FEATURES

L N	OB/XF CODE	DESCRIPTION	BLD	CAP	L	W	UNITS	UT	Adj R	ADJ UNIT PRICE	ORIG COND	YEAR ON	YEAR ACTUAL	Q	% COND	OB/XF MKT VALUE	NOTES

LAND DESCRIPTION

TOTAL OB/XF 0

L N	USE CODE	CLS	LAND USE DESCRIPTION	CAP	R D	LOC ZONE	FRONT	DEPTH	TOT LND UTS	UNIT TYPE	D T	DPTH FACT	% COND	TOT ADJ	UNIT PRICE	ADJ UNIT PRICE	LAND VALUE	OTHER ADJUSTMENTS AND NOTES	YEAR	DENSITY	DECL	FRZ	YR	CONSRV

REVIEW DATE 07/21/2021 BY TWA Total Acres: 12.53 Total Land Value: 63,245 Market: 200,070 Agricultural: 3,245 Common: 60,000 PRINTED 08/06/2024 BY SYS