PT SW1/4 OF NE1/4 OF
SEC 2-2N-23E & PT LOTS 25,26,
27,28 & 36 IN OR 1627/966 &

MCDANIEL LONNIE J & KIMBERLY L/
4489 CR 108
HILLIARD, FL 32046

2024

02-2N-23-0000-0002-0000

NASSAU COUNTY PROPERTY

BUILDING CHARACTERISTICS

ELEMENT	CD	CONSTRUCTION
Exterior Wall	19	COMMON BRK 60
Exterior Wall	08	WD ON PLY 40
Roof Structur	08	IRREGULAR 100
Roof Cover	12	MODULAR MT 100
Interior Wall	05	DRYWALL 100
Interior Floo	14	CARPET 90
Interior Floo	09	PINE WOOD 10
Air Condition	03	CENTRAL 100
Heating Type	04	AIR DUCTED 100
Bedrooms		4 100
Bathrooms		3 100
Frame	02	WOOD FRAME 100
Stories	2.	2. 100
Units		0 100
BUD8 Adjustme	06	DIST 1D 100
Occupancy	00	NONE 100
Quality	02	Quality Level 02

DOR CODE	0100	SINGLE FAMILY	
MAP NUM		MKT AREA	09
NEIGHBORHOOD/LOC	9001.00		

AREA TYPE	TOTAL GROSS AREA	PCT OF BASE	TOT ADJ AREA	SUBAREA MARKET VALUE
BAS	2,296	100	2,296	193,561
BAS	146	100	146	12,308
FGR	555	55	305	25,713
FOP	224	30	67	5,648
FOP	120	30	36	3,035
FOP	516	30	155	13,067
FUS	840	100	840	70,815
TOTALS	4,697		3,845	324,147

MARKET ADJUSTMENTS

TYPE	MDL	EFF. AREA	TOT ADJ PTS	EFF. BASE RATE	REPL. COST NEW	AYB	EYB	ECON	FNCT		NORM	% COND
0900	01	3,845	97.0425	121.30	466,398	1975	1980	0	0	0	30.50	69.50

1 SNGL FAM – 100% - 2018 Heated Area: 3282 HX Base Yr 2018

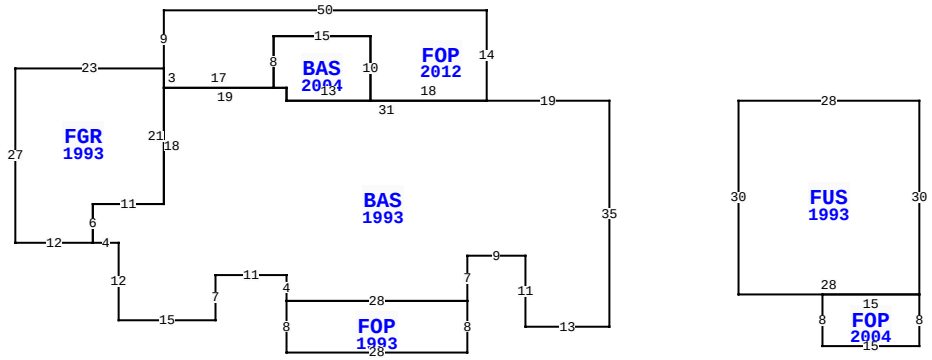

4489 CR 108, HILLIARD

BLD DATE	03/03/2023 NW	LGL DATE	
XF DATE		LAND DATE	05/19/2023 MLU
INC DATE		AG DATE	

VALUATION SUMMARY

VALUATION BY		STANDARD
Tax Group: 6	Tax Dist:	
BUILDING MARKET VALUE		361,037
TOTAL MARKET OB/XF VALUE		49,895
TOTAL LAND VALUE - MARKET		241,780
TOTAL MARKET VALUE		652,712
SOH/AGL Deduction		292,033
ASSESSED VALUE		360,679
TOTAL EXEMPTION VALUE	HX HB	50,000
BASE TAXABLE VALUE		310,679
TOTAL JUST VALUE		652,712
NCON VALUE		0
INCOME VALUE		
PREVIOUS YEAR MKT VALUE		640,466

PERMIT NUM	DESCRIPTION	AMT	ISSUED
C4807	CO ISSUED	0	07/01/2006
MH4807	MH MOVE-ON	0	07/01/2006
P11362	OTHER	0	07/01/2006

SALES DATA

OFF RECORD Number	DATE	TYPE INST	Q U	V I	RSN CD	SALE PRICE
1627/0966	6/16/2009	QC	U	I	11	1,700
GRANTOR: PLUM CREEK TIMBERLAND						
GRANTEE: MCDANIEL LONNIE J						
1627/0969	5/22/2009	WD	U	I	12	170,000
GRANTOR: GMAC MORTGAGE LLC						
GRANTEE: MCDANIEL LONNIE J &						

BUILDING NOTES

BUILDING DIMENSIONS

BAS=[YR=1993] W19 FOP=[YR=2012] N14 W50 S9 FGR=[YR=1993] W23 S27 E12 N6 E11 N21$ S3 E17 BAS=[YR=2004] E2 S2 E13 N10 W15 S8$ N8 E15 S10 E18$ W31 N2 W19 S18 W11 S6 E4 S12 E15 N7E11 S4 FOP=[YR=1993] S8 E28 N8 W28 $ E28 N7 E9 S11 E13 N35 $ PTR=E20FUS=[YR=1993] E28 S30 FOP=[YR=2004] S8W15 N8 E15 $ W28 N30 $W20$.

EXTRA FEATURES

LN	OB/XF CODE	DESCRIPTION	BLD	CAP	L	W	UNITS	UT	Adj R	ADJ UNIT PRICE	ORIG COND	YEAR ON	YEAR ACTUAL	Q	% COND	OB/XF MKT VALUE	NOTES
1	0500	FP-PRE FAB	0	100	0	0	1.00	UT	3,500.00	3,500.00	100	1980	1980	3	46.5	1,628	
2	0811	CONCRETE B	0	100	0	0	660.00	SF	5.20	5.20	100	1980	1980	3	32.5	1,115	
3	0861	POOL GUNIT	0	100	0	0	368.00	SF	46.75	46.75	100	2016	2016	3	81	13,935	
4	0855	CONC PAVER	0	100	0	0	1,057.00	SF	10.00	10.00	100	2016	2016	3	96	10,147	
5	0351	CARPORT MT	0	100	45	30	1,350.00	SF	10.00	10.00	100	2018	2018	3	82	11,070	
6	0937	WELL	0	100	0	0	1.00	UT	6,000.00	6,000.00	100	2007	2007	3	100	6,000	
7	0936	SEPTC TANK	0	100	0	0	1.00	UT	6,000.00	6,000.00	100	2007	2007	3	100	6,000	

LAND DESCRIPTION

TOTAL OB/XF 49,895

LN	USE CODE	CLS	LAND USE DESCRIPTION	CAP	RD	LOC ZONE	FRONT	DEPTH	TOT LND UTS	UNIT TYPE	DT	DPTH FACT	% COND	TOT ADJ	UNIT PRICE	ADJ UNIT PRICE	LAND VALUE	OTHER ADJUSTMENTS AND NOTES	YEAR	DENSITY	DECL	FRZ	YR	CONSRV
1	000115	C	SFR ACRES	100	0004	OR	0.00	0.00	17.27	AC		1.00	1.00	1.00	14,000.00	14,000.00	241,780							

REVIEW DATE 08/06/2021 BY TWA Total Acres: 17.27 Total Land Value: 241,780 Market: 0 Agricultural: 0 Common: 241,780 PRINTED 08/06/2024 BY SYS

PT SW1/4 OF NE1/4 OF
SEC 2-2N-23E & PT LOTS 25,26,
27,28 & 36 IN OR 1627/966 &

MCDANIEL LONNIE J & KIMBERLY L/
4489 CR 108
HILLIARD, FL 32046

2024

02-2N-23-0000-0002-0000

NASSAU COUNTY PROPERTY

BUILDING CHARACTERISTICS

ELEMENT	CD	CONSTRUCTION
Exterior Wall	05	AVERAGE 100
Roof Structur	03	GABLE/HIP 100
Roof Cover	12	MODULAR MT 100
Interior Wall		N/A 100
Interior Floo	03	CONC FINSH 100
Air Condition	99	N/A 100
Heating Type		N/A 100
Bedrooms		0 100
Bathrooms		0 100
Frame	02	WOOD FRAME 100
Stories	0	0 100
Units		0 100
Occupancy	00	NONE 100
Quality	03	Quality Level 03

DOR CODE	0100	SINGLE FAMILY	
MAP NUM		MKT AREA	09
NEIGHBORHOOD/LOC	9001.00		

AREA TYPE	TOTAL GROSS AREA	PCT OF BASE	TOT ADJ AREA	SUBAREA MARKET VALUE
BAS	2,268	100	2,268	36,890
TOTALS	2,268		2,268	36,890

MARKET ADJUSTMENTS

TYPE	MDL	EFF. AREA	TOT ADJ PTS	EFF. BASE RATE	REPL. COST NEW	AYB	EYB	ECON	FNCT		NORM	% COND
6500	01	2,268	49.9800	17.49	39,667	2016	2016	0	0	0	7.00	93.00

2 GARAGE RES – 100% - 2018 Heated Area: 2268 HX Base Yr 2018

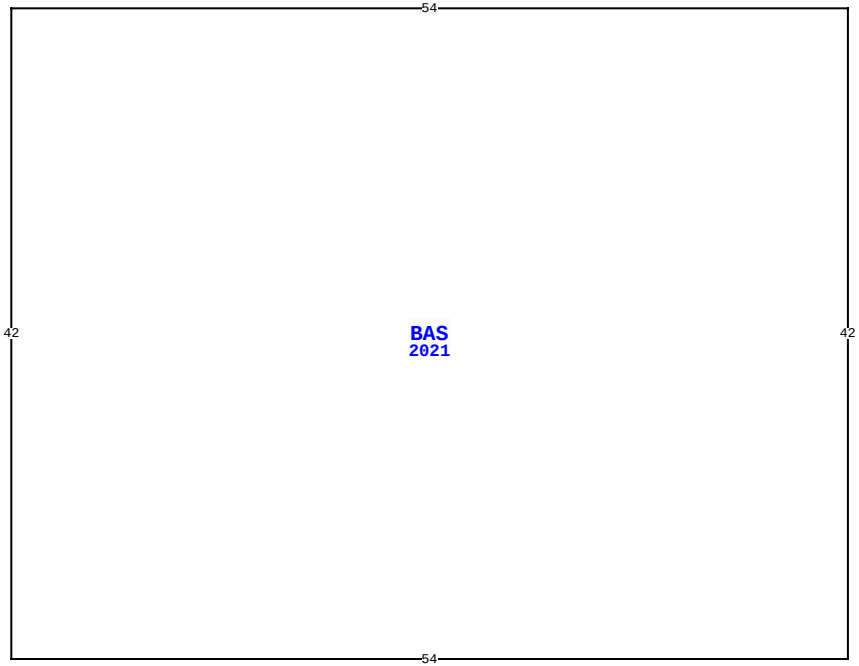

4489 CR 108, HILLIARD

BLD DATE	03/03/2023 NW	LGL DATE	
XF DATE		LAND DATE	05/19/2023 MLU
INC DATE		AG DATE	

VALUATION SUMMARY

VALUATION BY		STANDARD
Tax Group: 6	Tax Dist:	
BUILDING MARKET VALUE		361,037
TOTAL MARKET OB/XF VALUE		49,895
TOTAL LAND VALUE - MARKET		241,780
TOTAL MARKET VALUE		652,712
SOH/AGL Deduction		292,033
ASSESSED VALUE		360,679
TOTAL EXEMPTION VALUE	HX HB	50,000
BASE TAXABLE VALUE		310,679
TOTAL JUST VALUE		652,712
NCON VALUE		0
INCOME VALUE		
PREVIOUS YEAR MKT VALUE		640,466

PERMIT NUM	DESCRIPTION	AMT	ISSUED

SALES DATA

OFF RECORD Number	DATE	TYPE INST	Q / U	V / I	RSN CD	SALE PRICE
1627/0966	6/16/2009	QC	U	I	11	1,700
GRANTOR: PLUM CREEK TIMBERLAND						
GRANTEE: MCDANIEL LONNIE J						
1627/0969	5/22/2009	WD	U	I	12	170,000
GRANTOR: GMAC MORTGAGE LLC						
GRANTEE: MCDANIEL LONNIE J &						

BUILDING NOTES

BUILDING DIMENSIONS

BAS=[YR=2021] W54 S42 E54 N42$.

EXTRA FEATURES

L N	OB/XF CODE	DESCRIPTION	BLD	CAP	L	W	UNITS	UT	Adj R	ADJ UNIT PRICE	ORIG COND	YEAR ON	YEAR ACTUAL	Q	% COND	OB/XF MKT VALUE	NOTES

LAND DESCRIPTION

TOTAL OB/XF 0

L N	USE CODE	CLS	LAND USE DESCRIPTION	CAP	R D	LOC ZONE	FRONT	DEPTH	TOT LND UTS	UNIT TYPE	D T	DPTH FACT	% COND	TOT ADJ	UNIT PRICE	ADJ UNIT PRICE	LAND VALUE	OTHER ADJUSTMENTS AND NOTES	YEAR	DENSITY	DECL	FRZ	YR	CONSRV

REVIEW DATE 08/06/2021 BY TWA Total Acres: 17.27 Total Land Value: 241,780 Market: 0 Agricultural: 0 Common: 241,780 PRINTED 08/06/2024 BY SYS