PT FRAC SEC 20-2N-28E PAR 5 &
PT OF PAR'S 3 & 3-1 OF
COURTSIDE VILLAGE CONDO PH 3

OMNI AMELIA ISLAND LLC
4001 MAPLE AVENUE, SUITE 500
DALLAS, TX 75219

2024

01-6N-29-AICO-0005-0000

NASSAU COUNTY PROPERTY

BUILDING CHARACTERISTICS

ELEMENT	CD	CONSTRUCTION
Exterior Wall	05	AVERAGE 100
Roof Structur	04	WOOD TRUSS 100
Roof Cover	03	COMP SHNGL 100
Interior Wall	05	DRYWALL 100
Interior Floo	14	CARPET 100
Ceiling	02	F.NOT SUS 100
Air Condition	03	CENTRAL 100
Heating Type	04	AIR DUCTED 100
Fixtures		5 100
Frame	02	WOOD FRAME 100
Story Height		8 100
RMS		2 100
Stories	1.	1. 100
Units		0 100
BUD8 Adjustme	05	DIST 1A 100
Occupancy	00	NONE 100
Quality	04	Quality Level 04
DOR CODE	1600	COMMUNITY SHOPPING
MAP NUM		MKT AREA 10
NEIGHBORHOOD/LOC	10002.00	

AREA TYPE	TOTAL GROSS AREA	PCT OF BASE	TOT ADJ AREA	SUBAREA MARKET VALUE
BAS	416	100	416	12,744
CAN	372	30	112	3,431
FST	21	50	10	306
FST	21	50	10	306
PTO	80	5	4	123
PTO	85	5	4	123
SFB	63	80	50	1,532
TOTALS	1,058		606	18,565

MARKET ADJUSTMENTS

TYPE	MDL	EFF. AREA	TOT ADJ PTS	EFF. BASE RATE	REPL. COST NEW	AYB	EYB	ECON	FNCT		NORM	% COND
1701	04	606	102.9105	145.88	88,403	1973	1973	0	0	0	79.00	21.00

1 OFFICE 1&2 – 0% - 0 Heated Area: 466 HX Base Yr

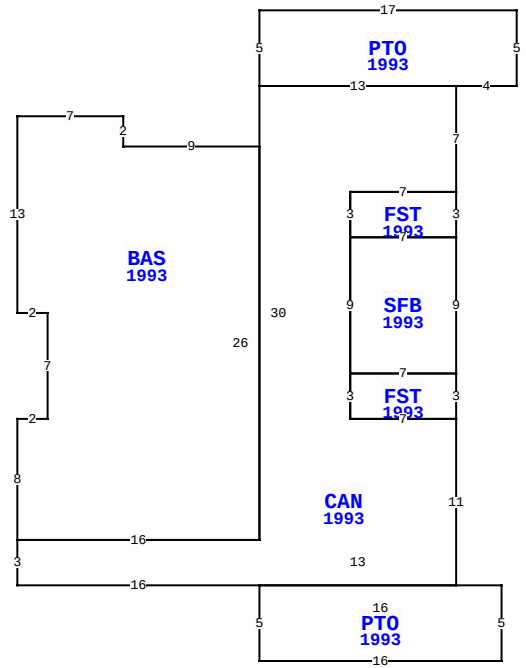

BLD DATE	09/14/2022 KK	LGL DATE	
XF DATE	09/14/2022 HS	LAND DATE	09/14/2022 HS
INC DATE		AG DATE	

102 RACQUET PARK DR, FERNANDINA BEACH

VALUATION SUMMARY

VALUATION BY	STANDARD
Tax Group: 5	Tax Dist:
BUILDING MARKET VALUE	3,558,461
TOTAL MARKET OB/XF VALUE	640,192
TOTAL LAND VALUE - MARKET	2,015,000
TOTAL MARKET VALUE	6,213,653
SOH/AGL Deduction	655,389
ASSESSED VALUE	5,558,264
TOTAL EXEMPTION VALUE	0
BASE TAXABLE VALUE	5,558,264
TOTAL JUST VALUE	6,213,653
NCON VALUE	0
INCOME VALUE	
PREVIOUS YEAR MKT VALUE	6,458,076

PERMIT NUM	DESCRIPTION	AMT	ISSUED
22009970	SHED	6,527	06/29/2022
B1429169	110 RACQUET PARK	300	08/01/2014
E1428092	110 RACQUET PARK	0	08/01/2014
B1326841	VERANDAH	30,000	02/01/2013
E1325823	VERANDAH ELEC REM	0	02/01/2013
P1316365	VERANDAH PLUMBING	0	02/01/2013

SALES DATA

OFF RECORD Number	DATE	TYPE INST	Q / U	V / I	RSN CD	SALE PRICE
1700/1211	9/17/2010	WD	U	I	11	100
GRANTOR: AMELIA ISLAND COMPANY						
GRANTEE: OMNI AMELIA ISLAND						
0129/0227	8/10/1972	WD	U	V	16	12,000
GRANTOR: MITCHELL FRANZ & MART						
GRANTEE: AMELIA ISLAND COMPA						

BUILDING NOTES

BUILDING DIMENSIONS

BAS=[YR=1993] W9 N2 W7 S13 E2 S7 W2 S8 CAN=[YR=1993] S3 E16 PTO=[YR=1993] S5 E16 N5 W16$ E13 N11 FST=[YR=1993] N3 W7 S3 E7$ W7 N3 SFB=[YR=1993] E7 N9 W7 S9$ N9 FST=[YR=1993] E7 N3 W7 S3$ N3 E7 N7 PTO=[YR=1993] E4 N5 W17 S5 E13$ W13 S30 W16$ E16 N26$.

EXTRA FEATURES

LN	OB/XF CODE	DESCRIPTION	BLD	CAP	L	W	UNITS	UT	Adj R	ADJ UNIT PRICE	ORIG COND	YEAR ON	YEAR ACTUAL	Q	% COND	OB/XF MKT VALUE	NOTES
1	0991	TENNIS CRT	0	0	0	0	22.00	UT	18,000.00	18,000.00	100	1980	1980	3	32.5	128,700	
2	0803	ASPHALT C	0	0	0	0	128,963.00	SF	2.00	2.00	100	1986	1986	3	50	128,963	
3	0850	PEBBLE WLK	0	0	0	0	7,085.00	SF	3.50	3.50	100	1974	1974	3	25	6,199	
4	0812	CONCRETE C	0	0	0	0	6,566.00	SF	4.00	4.00	100	1986	1986	3	49.5	13,001	
5	0965	SPRNK FIRE	0	0	0	0	288.00	UT	240.00	240.00	100	1986	1986	3	60	41,472	
6	0972	ST LGHT UN	0	0	0	0	9.00	UT	2,530.00	2,530.00	100	1986	1986	3	24	5,465	
7	0990	TENNIS CRT	0	0	0	0	1.00	UT	40,000.00	40,000.00	27	1975	1975	3	27	10,800	
8	0381	COOLER	0	0	0	0	220.00	SF	82.50	82.50	100	1986	1986	3	20	3,630	
9	0383	FREEZER	0	0	0	0	153.00	SF	105.00	105.00	100	1986	1986	3	20	3,213	
10	0840	MARBLE	0	0	0	0	850.00	SF	40.00	40.00	100	1986	1986	3	82	27,880	

TOTAL OB/XF 369,323

LAND DESCRIPTION

LN	USE CODE	CLS	LAND USE DESCRIPTION	CAP	RD	LOC ZONE	FRONT	DEPTH	TOT LND UTS	UNIT TYPE	DT	DPTH FACT	% COND	TOT ADJ	UNIT PRICE	ADJ UNIT PRICE	LAND VALUE	OTHER ADJUSTMENTS AND NOTES	YEAR	DENSITY	DECL	FRZ	YR	CONSRV
1	001050	C	COMM RESRT	0	0006	PUD	0.00	0.00	17.26	AC		1.00	1.00	1.00	100,000.00	100,000.00	1,726,000							
2	001050	C	COMM RESRT	0	0006	PUD	0.00	0.00	2.89	AC		1.00	1.00	1.00	100,000.00	100,000.00	289,000							

REVIEW DATE 09/14/2022 BY HS Total Acres: 20.15 Total Land Value: 2,015,000 Market: 0 Agricultural: 0 Common: 2,015,000 PRINTED 08/06/2024 BY SYS

PT FRAC SEC 20-2N-28E PAR 5 &
PT OF PAR'S 3 & 3-1 OF
COURTSIDE VILLAGE CONDO PH 3

OMNI AMELIA ISLAND LLC
4001 MAPLE AVENUE, SUITE 500
DALLAS, TX 75219

2024

01-6N-29-AICO-0005-0000

BUILDING CHARACTERISTICS

ELEMENT	CD	CONSTRUCTION
Exterior Wall	14	WD SHINGLE 80
Exterior Wall	28	GLASS THRM 20
Roof Structur	04	WOOD TRUSS 100
Roof Cover	03	COMP SHNGL 100
Interior Wall	05	DRYWALL 80
Interior Wall	08	DECORATIVE 20
Interior Floo	13	LVT/LAMNT 50
Interior Floo	14	CARPET 50
Ceiling	02	F.NOT SUS 100
Air Condition	03	CENTRAL 100
Heating Type	04	AIR DUCTED 100
Fixtures		24 100
Frame	03	MASONRY 100
Story Height		22 100
RMS		38 100
Stories	2.	2. 100
Units		0 100
BUD8 Adjustme	05	DIST 1A 100
Quality	00	QUALITY Level 03
Occupancy	00	OCCUPANCY 100

DOR CODE	1600	COMMUNITY SHOPPING	
MAP NUM		MKT AREA	10
NEIGHBORHOOD/LOC	10002.00		

AREA TYPE	TOTAL GROSS AREA	PCT OF BASE	TOT ADJ AREA	SUBAREA MARKET VALUE
BAS	9,383	100	9,383	685,522
CAN	3,812	30	1,144	83,581
FEP	4,150	80	3,320	242,559
FST	256	50	128	9,352
FST	25	50	12	877
FUS	1,854	100	1,854	135,453
PTO	252	5	13	950
PTO	906	5	45	3,288
UOP	420	20	84	6,137
TOTALS	21,058		15,983	1,167,718

MARKET ADJUSTMENTS

TYPE	MDL	EFF. AREA	TOT ADJ PTS	EFF. BASE RATE	REPL. COST NEW	AYB	EYB	ECON	FNCT		NORM	% COND
3403	04	15,983	119.0423	146.12	2,335,436	1974	1974	0	0	0	50.00	50.00

2 GYMNASIUM – 0% - 0 Heated Area: 14557 HX Base Yr

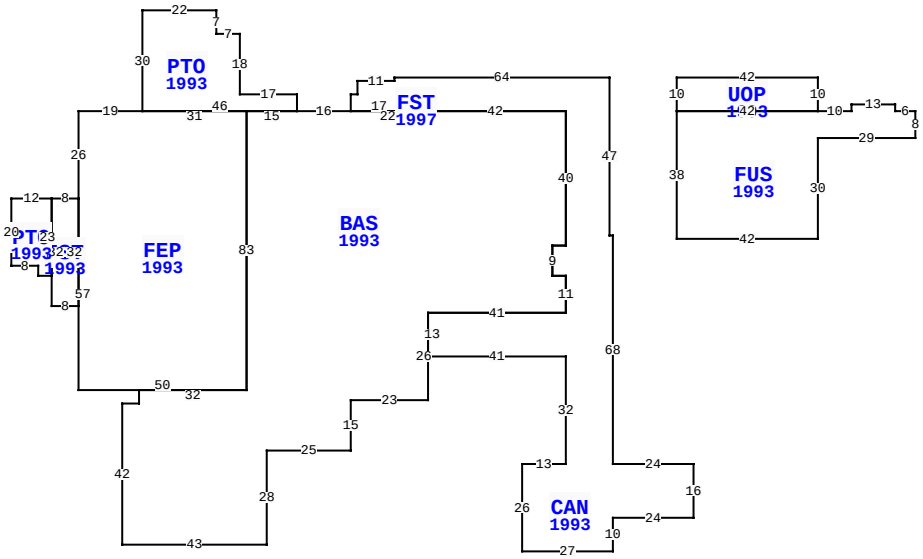

102 RACQUET PARK DR, FERNANDINA BEACH

BLD DATE	09/14/2022	KK	LGL DATE	
XF DATE	09/14/2022	HS	LAND DATE	09/14/2022 HS
INC DATE			AG DATE	

NASSAU COUNTY PROPERTY

PAGE 2 of 6 5

VALUATION SUMMARY

VALUATION BY	STANDARD
Tax Group: 5	Tax Dist:
BUILDING MARKET VALUE	3,558,461
TOTAL MARKET OB/XF VALUE	640,192
TOTAL LAND VALUE - MARKET	2,015,000
TOTAL MARKET VALUE	6,213,653
SOH/AGL Deduction	655,389
ASSESSED VALUE	5,558,264
TOTAL EXEMPTION VALUE	0
BASE TAXABLE VALUE	5,558,264
TOTAL JUST VALUE	6,213,653
NCON VALUE	0
INCOME VALUE	
PREVIOUS YEAR MKT VALUE	6,458,076

PERMIT NUM	DESCRIPTION	AMT	ISSUED
R1213215	REPAIR/RRF	76,500	11/01/2012
M16010	H/AC	80,000	03/01/2011
B24347	REMODEL	2,000	02/01/2011
E017917	CHNGE SRVC	0	04/01/2001
B9906153	REMODEL	131,000	06/01/1999
E973464	NEW CONSTR	25,000	01/01/1997

SALES DATA

OFF RECORD Number	DATE	TYPE INST	Q U	V I	RSN CD	SALE PRICE
1700/1211	9/17/2010	WD	U	I	11	100
GRANTOR: AMELIA ISLAND COMPANY						
GRANTEE: OMNI AMELIA ISLAND						
0129/0227	8/10/1972	WD	U	V	16	12,000
GRANTOR: MITCHELL FRANZ & MART						
GRANTEE: AMELIA ISLAND COMPA						

BUILDING NOTES

BUILDING DIMENSIONS

CAN=[YR=1993] W64 S1 W11 S4 W2 S5 BAS=[YR=1993] W16 PTO=[YR=1993] N5 W17 N18 W7 N7 W22 S30 FEP=[YR=1993] W19 S26 FST=[YR=1993] W8 PTO=[YR=1993] W12 S20 E8 S3 E4 N23$ S32 E8 N32$ S57 E50 N83 W31$ E46$ W15 S83 W32 S4 W5 S42 E43 N28 E25 N15 E23 N26 E41 N11 W4 N9 E4 N40 W42 FST=[YR=1997] N5 W5 S5 E5$ W22$ E17 N5 E5 S5 E42 S40 W4 S9 E4 S11 W41 S13 E41 S32 W13 S26 E27 N10 E24 N16 W24 N68 W1 N47$ PTR=E20 UOP=[YR=1993] E42 S10 FUS=[YR=1993] E10 N2 E13 S2 E6 S8 W29 S30 W42 N38 E42$ W42 N10$ W20$.

EXTRA FEATURES

LN	OB/XF CODE	DESCRIPTION	BLD	CAP	L	W	UNITS	UT	Adj R	ADJ UNIT PRICE	ORIG COND	YEAR ON	YEAR ACTUAL	Q	% COND	OB/XF MKT VALUE	NOTES
11	7080	SOUND SYS	0	0	0	0	4.00	UT	1,000.00	1,000.00	60	1986	1986	3	60	2,400	
12	1125	CB/STC 6"	0	0	0	0	1,978.00	SF	7.35	7.35	100	1986	1986	3	49.5	7,196	
13	0995	RCQTBL CT	0	0	0	0	2.00	UT	40,000.00	40,000.00	98	1986	1986	3	98	78,400	
14	0861	POOL GUNIT	0	0	60	28	1,680.00	SF	85.00	85.00	100	1986	1986	3	20	28,560	
15	0878	SPA	0	0	0	0	3.00	UT	8,000.00	8,000.00	100	1986	1986	3	20	4,800	
16	0874	SAUNA/STM	0	0	0	0	2.00	UT	150.00	150.00	100	1986	1986	3	20	60	
17	1135	GLASS BLK	0	0	0	0	392.00	SF	25.00	25.00	100	1986	1986	3	100	9,800	
18	0965	SPRNK FIRE	0	0	0	0	140.00	UT	240.00	240.00	100	1986	1986	3	60	20,160	
19	0812	CONCRETE C	0	0	214	66	14,124.00	SF	4.00	4.00	100	1989	1989	3	57	32,203	
20	0803	ASPHALT C	0	0	0	0	3,204.00	SF	2.00	2.00	100	1988	1988	3	50	3,204	

TOTAL OB/XF 186,783

LAND DESCRIPTION

LN	USE CODE	CLS	LAND USE DESCRIPTION	CAP	RD	LOC ZONE	FRONT	DEPTH	TOT LND UTS	UNIT TYPE	DT	DPTH FACT	% COND	TOT ADJ	UNIT PRICE	ADJ UNIT PRICE	LAND VALUE	OTHER ADJUSTMENTS AND NOTES	YEAR	DENSITY	DECL	FRZ	YR	CONSRV

REVIEW DATE 09/14/2022 BY HS Total Acres: 20.15 Total Land Value: 2,015,000 Market: 0 Agricultural: 0 Common: 2,015,000 PRINTED 08/06/2024 BY SYS

PT FRAC SEC 20-2N-28E PAR 5 &
PT OF PAR'S 3 & 3-1 OF
COURTSIDE VILLAGE CONDO PH 3

OMNI AMELIA ISLAND LLC
4001 MAPLE AVENUE, SUITE 500
DALLAS, TX 75219

2024

01-6N-29-AICO-0005-0000

NASSAU COUNTY PROPERTY

BUILDING CHARACTERISTICS

ELEMENT	CD	CONSTRUCTION
Exterior Wall	14	WD SHINGLE 100
Roof Structur	04	WOOD TRUSS 100
Roof Cover	03	COMP SHNGL 100
Interior Wall	08	DECORATIVE 100
Interior Floo	14	CARPET 70
Interior Floo	15	HARDTILE 30
Ceiling	01	FIN.SUSPD 100
Air Condition	07	ENG PACKGE 100
Heating Type	09	ENG F AIR 100
Fixtures		14 100
Frame	03	MASONRY 100
Story Height		12 100
RMS		12 100
Stories	1.	1. 100
Units		0 100
BUD8 Adjustme	05	DIST 1A 100
Occupancy	00	NONE 100
Quality	03	Quality Level 03
DOR CODE	1600	COMMUNITY SHOPPING
MAP NUM		MKT AREA 10
NEIGHBORHOOD/LOC	10002.00	

AREA TYPE	TOTAL GROSS AREA	PCT OF BASE	TOT ADJ AREA	SUBAREA MARKET VALUE
BAS	9,595	100	9,595	529,304
FOP	44	30	13	717
FOP	44	30	13	717
FOP	120	30	36	1,986
FOP	147	30	44	2,427
FOP	584	30	175	9,654
PTO	513	5	26	1,434
UOP	225	20	45	2,483
UOP	300	20	60	3,310
UOP	308	20	62	3,420
TOTALS	12,408		10,175	561,300

MARKET ADJUSTMENTS

TYPE	MDL	EFF. AREA	TOT ADJ PTS	EFF. BASE RATE	REPL. COST NEW	AYB	EYB	ECON	FNCT		NORM	% COND
1701	04	10,175	102.4100	145.17	1,477,105	1974	1982	0	0	0	62.00	38.00

3 OFFICE 1&2 - 0% - 0 Heated Area: 9595 HX Base Yr

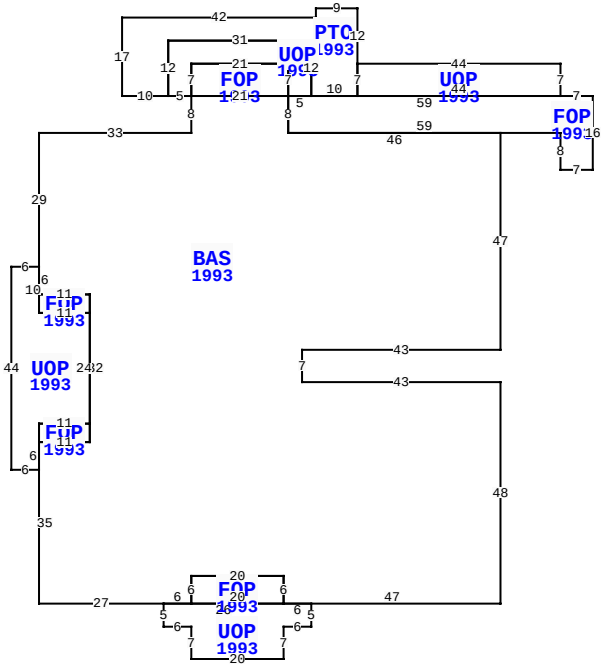

** This building has 11 Sub-Areas

102 RACQUET PARK DR, FERNANDINA BEACH

BLD DATE	09/14/2022	KK	LGL DATE		
XF DATE	09/14/2022	HS	LAND DATE	09/14/2022	HS
INC DATE			AG DATE		

VALUATION SUMMARY

VALUATION BY	STANDARD
Tax Group: 5	Tax Dist:
BUILDING MARKET VALUE	3,558,461
TOTAL MARKET OB/XF VALUE	640,192
TOTAL LAND VALUE - MARKET	2,015,000
TOTAL MARKET VALUE	6,213,653
SOH/AGL Deduction	655,389
ASSESSED VALUE	5,558,264
TOTAL EXEMPTION VALUE	0
BASE TAXABLE VALUE	5,558,264
TOTAL JUST VALUE	6,213,653
NCON VALUE	0
INCOME VALUE	
PREVIOUS YEAR MKT VALUE	6,458,076

PERMIT NUM	DESCRIPTION	AMT	ISSUED
B9603542	NEW CONSTR	280,000	12/01/1996
M962038	H/AC	0	12/01/1996
B9603435	REMODEL	761,000	11/01/1996
E963207	CHNGE SRVC	80,000	11/01/1996
M961983	H/AC	0	11/01/1996
P961786	REMODEL	5,000	11/01/1996

SALES DATA

OFF RECORD Number	DATE	TYPE INST	Q U	V I	RSN CD	SALE PRICE
1700/1211	9/17/2010	WD	U	I	11	100
GRANTOR: AMELIA ISLAND COMPANY						
GRANTEE: OMNI AMELIA ISLAND						
0129/0227	8/10/1972	WD	U	V	16	12,000
GRANTOR: MITCHELL FRANZ & MART						
GRANTEE: AMELIA ISLAND COMPA						

BUILDING NOTES

BUILDING DIMENSIONS

FOP=[YR=1993] W7 UOP=[YR=1993] N7 W44 PTO=[YR=1993] N12 W9 S2 W42 S17 E10 UOP=[YR=1993] N12 E31 S12 W5 FOP=[YR=1993] W21 N7 E21 S7 $ N7W21 S7 W5 $ N12 E31 S12 E10 N7$ S7 E44 $ W59 BAS=[YR=1993] W21 S8 W33 S29 UOP=[YR=1993] W6 S44 E6 N6 FOP=[YR=1993] E11N4 W11 S4 $ N4 E11 N24 FOP=[YR=1993] N4W11 S4 E11 $ W11 N10 $ S6 E11 S32 W11 S35 E27 UOP=[YR=1993] S5 E6 S7 E20 N7 E6 N5 W6 FOP=[YR=1993] N6 W20 S6 E20 $ W26 $ E6 N6 E20 S6 E47 N48 W43 N7 E43 N47 W46 N8 $ S8 E59 S8 E7 N16 $.

EXTRA FEATURES

LN	OB/XF CODE	DESCRIPTION	BLD	CAP	L	W	UNITS	UT	Adj R	ADJ UNIT PRICE	ORIG COND	YEAR ON	YEAR ACTUAL	Q	% COND	OB/XF MKT VALUE	NOTES
21	1075	TRELLIS G	0	0	24	5	120.00	SF	35.00	35.00	100	1994	1994	3	20	840	
22	1075	TRELLIS G	0	0	39	5	195.00	SF	35.00	35.00	100	1994	1994	3	20	1,365	
23	0097	AWNING CN	0	0	0	0	32.00	SF	65.00	65.00	100	1996	1996	3	40	832	
24	0850	PEBBLE WLK	0	0	0	0	2,152.00	SF	3.50	3.50	100	1997	1997	3	73	5,498	
25	0811	CONCRETE B	0	0	0	0	712.00	SF	5.20	5.20	100	1997	1997	3	73	2,703	
26	1075	TRELLIS G	0	0	49	9	441.00	SF	35.00	35.00	100	1990	1990	3	20	3,087	
27	0965	SPRNK FIRE	0	0	0	0	40.00	UT	240.00	240.00	100	1997	1997	3	73	7,008	
28	0648	LIGHTS-AV	0	0	0	0	12.00	UT	140.00	140.00	100	1990	1990	3	20	336	
29	0978	SECURTY LT	0	0	0	0	2.00	UT	450.00	450.00	100	1990	1990	3	28	252	
30	1242	WD DECK A	0	0	0	0	1,219.00	SF	10.00	10.00	100	1990	1990	3	20	2,438	

TOTAL OB/XF 24,359

LAND DESCRIPTION

LN	USE CODE	CLS	LAND USE DESCRIPTION	CAP	RD	LOC ZONE	FRONT	DEPTH	TOT LND UTS	UNIT TYPE	DT	DPTH FACT	% COND	TOT ADJ	UNIT PRICE	ADJ UNIT PRICE	LAND VALUE	OTHER ADJUSTMENTS AND NOTES	YEAR	DENSITY	DECL	FRZ	YR	CONSRV

REVIEW DATE 09/14/2022 BY HS Total Acres: 20.15 Total Land Value: 2,015,000 Market: 0 Agricultural: 0 Common: 2,015,000 PRINTED 08/06/2024 BY SYS

PT FRAC SEC 20-2N-28E PAR 5 &
PT OF PAR'S 3 & 3-1 OF
COURTSIDE VILLAGE CONDO PH 3

OMNI AMELIA ISLAND LLC
4001 MAPLE AVENUE, SUITE 500
DALLAS, TX 75219

2024

01-6N-29-AICO-0005-0000

BUILDING CHARACTERISTICS

ELEMENT	CD	CONSTRUCTION
Exterior Wall	14	WD SHINGLE 100
Roof Structur	04	WOOD TRUSS 100
Roof Cover	03	COMP SHNGL 100
Interior Wall	05	DRYWALL 100
Interior Floo	14	CARPET 70
Interior Floo	15	HARDTILE 30
Ceiling	01	FIN.SUSPD 100
Air Condition	07	ENG PACKGE 100
Heating Type	09	ENG F AIR 100
Fixtures		29 100
Frame	03	MASONRY 100
Story Height		12 100
RMS		7 100
Stories	1.	1. 100
Units		0 100
BUD8 Adjustme	05	DIST 1A 100
Occupancy	OO	OWNER OCC 100
Quality	06	Quality Level 06
DOR CODE	1600	COMMUNITY SHOPPING
MAP NUM		MKT AREA 10
NEIGHBORHOOD/LOC	10002.00	

AREA TYPE	TOTAL GROSS AREA	PCT OF BASE	TOT ADJ AREA	SUBAREA MARKET VALUE
BAS	4,318	100	4,318	570,066
BRG	1,600	125	2,000	264,042
CLP	376	30	113	14,918
FOP	160	30	48	6,337
KTA	4,441	110	4,885	644,921
PTO	1,146	5	57	7,525
UOP	330	20	66	8,713
UOP	50	20	10	1,320
UST	210	40	84	11,090
UST	338	40	135	17,823
TOTALS	12,969		11,716	1,546,756

MARKET ADJUSTMENTS

TYPE	MDL	EFF. AREA	TOT ADJ PTS	EFF. BASE RATE	REPL. COST NEW	AYB	EYB	ECON	FNCT		NORM	% COND
2101	04	11,716	140.6300	242.24	2,838,084	1974	1988	0	0	0	45.50	54.50

4 RSTARANT 1 – 0% - 0 Heated Area: 10359 HX Base Yr

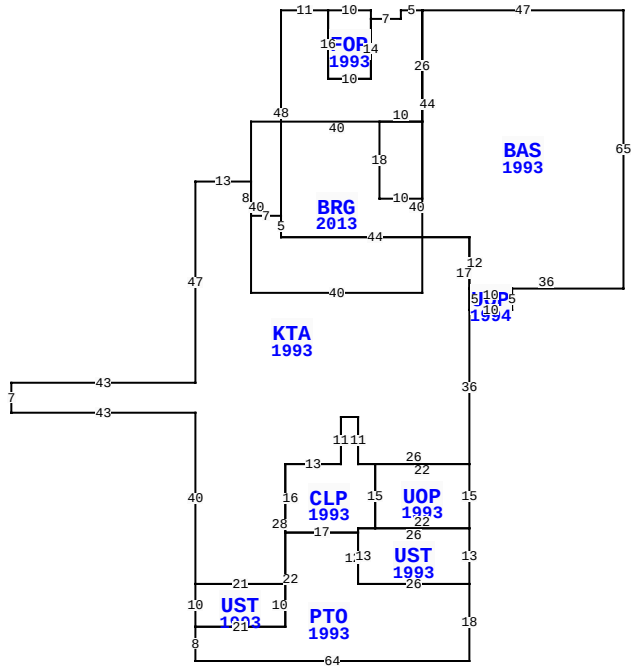

102 RACQUET PARK DR, FERNANDINA BEACH

BLD DATE	09/14/2022	KK	LGL DATE	
XF DATE	09/14/2022	HS	LAND DATE	09/14/2022 HS
INC DATE			AG DATE	

NASSAU COUNTY PROPERTY

PAGE 4 of 6 5

VALUATION SUMMARY

VALUATION BY	STANDARD
Tax Group: 5	Tax Dist:
BUILDING MARKET VALUE	3,558,461
TOTAL MARKET OB/XF VALUE	640,192
TOTAL LAND VALUE - MARKET	2,015,000
TOTAL MARKET VALUE	6,213,653
SOH/AGL Deduction	655,389
ASSESSED VALUE	5,558,264
TOTAL EXEMPTION VALUE	0
BASE TAXABLE VALUE	5,558,264
TOTAL JUST VALUE	6,213,653
NCON VALUE	0
INCOME VALUE	
PREVIOUS YEAR MKT VALUE	6,458,076

PERMIT NUM	DESCRIPTION	AMT	ISSUED
B9603006	DEMOLITION	0	06/01/1996
B940859	REMODEL	2,050	03/01/1994
B9400698	ADDITION	72,785	01/01/1994
5440	XFOB	18,920	01/17/1989
B863274	N/A	28,000	04/01/1986

SALES DATA

OFF RECORD Number	DATE	TYPE INST	Q U	V I	RSN CD	SALE PRICE
1700/1211	9/17/2010	WD	U	I	11	100
GRANTOR: AMELIA ISLAND COMPANY						
GRANTEE: OMNI AMELIA ISLAND						
0129/0227	8/10/1972	WD	U	V	16	12,000
GRANTOR: MITCHELL FRANZ & MART						
GRANTEE: AMELIA ISLAND COMPA						

BUILDING NOTES

BUILDING DIMENSIONS

BRG=[YR=2013] W40 S40 E40 N40$ BAS=[YR=1993] N26 W5 S2 W7 FOP=[YR=1993] N2 W10 S16 E10 N14$ S14 W10 N16 W11 S48 KTA=[YR=1993] W7 N8 W13 S47 W43 S7 E43 S40 UST=[YR=1993] S10 PTO=[YR=1993] S8 E64 N18 UST=[YR=1993] N13 UOP=[YR=1993] N15 W22 CLP=[YR=1993] W4 N11 W4 S11 W13 S16 E17 N1 E4 N15$ S15 E22$ W26 S13 E26$ W26 N12 W17 S22 W21$ E21 N10 W21$ E21 N28 E13 N11 E4 S11 E26 N36 UOP=[YR=1994] E10 N5 W10 S5 $ N17 W44 N5$ S5 E44 S12 E36 N65 W47 S44 W10 N18 E10$.

EXTRA FEATURES

LN	OB/XF CODE	DESCRIPTION	BLD	CAP	L	W	UNITS	UT	Adj R	ADJ UNIT PRICE	ORIG COND	YEAR ON	YEAR ACTUAL	Q	% COND	OB/XF MKT VALUE	NOTES
31	0855	CONC PAVER	0	0	0	0	1,615.00	SF	10.00	10.00	100	1990	1990	3	59.5	9,609	
32	2520	FIELD LGHT	0	0	0	0	4.00	UT	22,500.00	22,500.00	100	2000	2000	3	20	18,000	
33	1242	WD DECK A	0	0	0	0	40.00	SF	10.00	10.00	100	2005	2005	3	24	96	
34	2520	FIELD LGHT	0	0	0	0	4.00	UT	22,500.00	22,500.00	100	2000	2000	3	20	18,000	
35	0446	BOX FNC 6'	0	0	0	0	57.00	LF	20.00	20.00	100	2006	2006	3	27	308	
36	0802	ASPHALT B	0	0	48	20	960.00	SF	2.40	2.40	100	2005	2005	3	56	1,290	
37	0810	CONCRETE A	0	0	20	12	240.00	SF	6.50	6.50	100	2005	2005	3	86	1,342	
38	0810	CONCRETE A	0	0	10	10	100.00	SF	6.50	6.50	100	1995	1995	3	70	455	
39	0810	CONCRETE A	0	0	37	10	370.00	SF	6.50	6.50	100	1995	1995	3	70	1,684	
40	0803	ASPHALT C	0	0	0	0	2,657.00	SF	2.00	2.00	100	1995	1995	3	50	2,657	

TOTAL OB/XF 53,441

LAND DESCRIPTION

LN	USE CODE	CLS	LAND USE DESCRIPTION	CAP	RD	LOC ZONE	FRONT	DEPTH	TOT LND UTS	UNIT TYPE	DT	DPTH FACT	% COND	TOT ADJ	UNIT PRICE	ADJ UNIT PRICE	LAND VALUE	OTHER ADJUSTMENTS AND NOTES	YEAR	DENSITY	DECL	FRZ	YR	CONSRV

REVIEW DATE 09/14/2022 BY HS Total Acres: 20.15 Total Land Value: 2,015,000 Market: 0 Agricultural: 0 Common: 2,015,000 PRINTED 08/06/2024 BY SYS

PT FRAC SEC 20-2N-28E PAR 5 &
PT OF PAR'S 3 & 3-1 OF
COURTSIDE VILLAGE CONDO PH 3

OMNI AMELIA ISLAND LLC
4001 MAPLE AVENUE, SUITE 500
DALLAS, TX 75219

2024

01-6N-29-AICO-0005-0000

BUILDING CHARACTERISTICS

ELEMENT	CD	CONSTRUCTION
Exterior Wall	29	NONE 100
Roof Structur	04	WOOD TRUSS 100
Roof Cover	12	MODULAR MT 100
Interior Wall	07	NONE 100
Interior Floo	03	CONC FINSH 100
Ceiling	04	NONE 100
Air Condition	01	NONE 100
Heating Type	01	NONE 100
Fixtures		0 100
Frame	02	WOOD FRAME 100
Story Height		12 100
RMS		0 100
Stories	1.	1. 100
Units		0 100
Occupancy	00	NONE 100
Quality	05	Quality Level 05

DOR CODE	1600	COMMUNITY SHOPPING	
MAP NUM		MKT AREA	10
NEIGHBORHOOD/LOC	10002.00		

AREA TYPE	TOTAL GROSS AREA	PCT OF BASE	TOT ADJ AREA	SUBAREA MARKET VALUE
BAS	1,995	100	1,995	5,127
TOTALS	1,995		1,995	5,127

MARKET ADJUSTMENTS

TYPE	MDL	EFF. AREA	TOT ADJ PTS	EFF. BASE RATE	REPL. COST NEW	AYB	EYB	ECON	FNCT		NORM	% COND
8600	04	1,995	21.4200	5.14	10,254	1986	1986	0	0	0	50.00	50.00

5 BARNS – 0% - 0 Heated Area: 1995 HX Base Yr

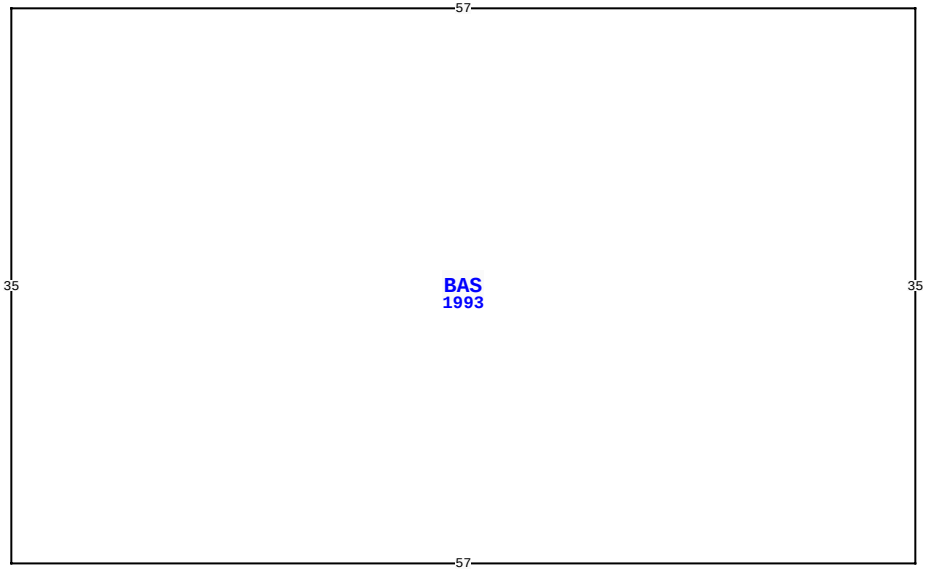

102 RACQUET PARK DR, FERNANDINA BEACH

BLD DATE	09/14/2022	KK	LGL DATE	
XF DATE	09/14/2022	HS	LAND DATE	09/14/2022 HS
INC DATE			AG DATE	

NASSAU COUNTY PROPERTY

PAGE 5 of 6 5

VALUATION SUMMARY

VALUATION BY	STANDARD
Tax Group: 5	Tax Dist:
BUILDING MARKET VALUE	3,558,461
TOTAL MARKET OB/XF VALUE	640,192
TOTAL LAND VALUE - MARKET	2,015,000
TOTAL MARKET VALUE	6,213,653
SOH/AGL Deduction	655,389
ASSESSED VALUE	5,558,264
TOTAL EXEMPTION VALUE	0
BASE TAXABLE VALUE	5,558,264
TOTAL JUST VALUE	6,213,653
NCON VALUE	0
INCOME VALUE	
PREVIOUS YEAR MKT VALUE	6,458,076

PERMIT NUM	DESCRIPTION	AMT	ISSUED

SALES DATA

OFF RECORD Number	DATE	TYPE INST	Q U	V I	RSN CD	SALE PRICE
1700/1211	9/17/2010	WD	U	I	11	100
GRANTOR: AMELIA ISLAND COMPANY						
GRANTEE: OMNI AMELIA ISLAND						
0129/0227	8/10/1972	WD	U	V	16	12,000
GRANTOR: MITCHELL FRANZ & MART						
GRANTEE: AMELIA ISLAND COMPA						

BUILDING NOTES

BUILDING DIMENSIONS

BAS=[YR=1993] W57 S35 E57 N35$.

EXTRA FEATURES

LN	OB/XF CODE	DESCRIPTION	BLD	CAP	L	W	UNITS	UT	Adj R	ADJ UNIT PRICE	ORIG COND	YEAR ON	YEAR ACTUAL	Q	% COND	OB/XF MKT VALUE	NOTES
41	0940	SHEDS/PORT	0	0	18	12	216.00	SF	30.00	30.00	100	2022	2022	3	97	6,286	

LAND DESCRIPTION

TOTAL OB/XF 6,286

LN	USE CODE	CLS	LAND USE DESCRIPTION	CAP	RD	LOC ZONE	FRONT	DEPTH	TOT LND UTS	UNIT TYPE	DT	DPTH FACT	% COND	TOT ADJ	UNIT PRICE	ADJ UNIT PRICE	LAND VALUE	OTHER ADJUSTMENTS AND NOTES	YEAR	DENSITY	DECL	FRZ	YR	CONSRV

REVIEW DATE 09/14/2022 BY HS Total Acres: 20.15 Total Land Value: 2,015,000 Market: 0 Agricultural: 0 Common: 2,015,000 PRINTED 08/06/2024 BY SYS

PT FRAC SEC 20-2N-28E PAR 5 &
PT OF PAR'S 3 & 3-1 OF
COURTSIDE VILLAGE CONDO PH 3

OMNI AMELIA ISLAND LLC
4001 MAPLE AVENUE, SUITE 500
DALLAS, TX 75219

2024

01-6N-29-AICO-0005-0000

BUILDING CHARACTERISTICS

ELEMENT	CD	CONSTRUCTION
Exterior Wall	14	WD SHINGLE 100
Roof Structur	04	WOOD TRUSS 100
Roof Cover	03	COMP SHNGL 100
Interior Wall	05	DRYWALL 100
Interior Floo	14	CARPET 90
Interior Floo	11	CLAY TILE 10
Ceiling	02	F.NOT SUS 100
Air Condition	03	CENTRAL 100
Heating Type	04	AIR DUCTED 100
Fixtures		9 100
Frame	02	WOOD FRAME 100
Story Height		12 100
RMS		4 100
Stories	1.	1. 100
Units		0 100
Occupancy	00	NONE 100
Quality	03	Quality Level 03
DOR CODE	1600	COMMUNITY SHOPPING
MAP NUM		MKT AREA 10
NEIGHBORHOOD/LOC	10002.00	

AREA TYPE	TOTAL GROSS AREA	PCT OF BASE	TOT ADJ AREA	SUBAREA MARKET VALUE
BAS	2,451	100	2,451	220,415
CAN	16	30	5	450
CAN	1,394	30	418	37,590
UOP	28	20	6	539
TOTALS	3,889		2,880	258,995

MARKET ADJUSTMENTS

TYPE	MDL	EFF. AREA	TOT ADJ PTS	EFF. BASE RATE	REPL. COST NEW	AYB	EYB	ECON	FNCT		NORM	% COND
3403	04	2,880	100.3600	123.19	354,787	1997	1997	0	0	0	27.00	73.00

6 GYMNASIUM – 0% - 0 Heated Area: 2451 HX Base Yr

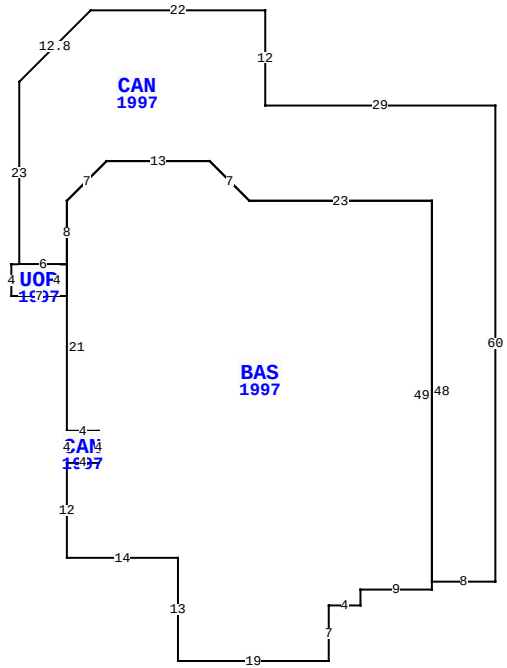

102 RACQUET PARK DR, FERNANDINA BEACH

BLD DATE	09/14/2022	KK	LGL DATE		
XF DATE	09/14/2022	HS	LAND DATE	09/14/2022	HS
INC DATE			AG DATE		

NASSAU COUNTY PROPERTY

PAGE 6 of 6 5

VALUATION SUMMARY

VALUATION BY	STANDARD
Tax Group: 5	Tax Dist:
BUILDING MARKET VALUE	3,558,461
TOTAL MARKET OB/XF VALUE	640,192
TOTAL LAND VALUE - MARKET	2,015,000
TOTAL MARKET VALUE	6,213,653
SOH/AGL Deduction	655,389
ASSESSED VALUE	5,558,264
TOTAL EXEMPTION VALUE	0
BASE TAXABLE VALUE	5,558,264
TOTAL JUST VALUE	6,213,653
NCON VALUE	0
INCOME VALUE	
PREVIOUS YEAR MKT VALUE	6,458,076

PERMIT NUM	DESCRIPTION	AMT	ISSUED

SALES DATA

OFF RECORD Number	DATE	TYPE INST	Q U	V I	RSN CD	SALE PRICE
1700/1211	9/17/2010	WD	U	I	11	100
GRANTOR: AMELIA ISLAND COMPANY						
GRANTEE: OMNI AMELIA ISLAND						
0129/0227	8/10/1972	WD	U	V	16	12,000
GRANTOR: MITCHELL FRANZ & MART						
GRANTEE: AMELIA ISLAND COMPA						

BUILDING NOTES

BUILDING DIMENSIONS

CAN=[YR=1997] W29 N12 W22 L9 D9 S23 UOP=[YR=1997]
W1S4E7N4W6$E6BAS=[YR=1997] S21CAN=[YR=1997]
S4E4N4W4$E4S4W4S12 E14S13E19N7E4N2E9N49W23 L5 U5 W13 L5 D5
S8$N8 U5 R5 E13 D5 R5 E23S48E8N60$.

EXTRA FEATURES

L N	OB/XF CODE	DESCRIPTION	BLD	CAP	L	W	UNITS	UT	Adj R	ADJ UNIT PRICE	ORIG COND	YEAR ON	YEAR ACTUAL	Q	% COND	OB/XF MKT VALUE	NOTES

LAND DESCRIPTION

TOTAL OB/XF 0

L N	USE CODE	CLS	LAND USE DESCRIPTION	CAP	R D	LOC ZONE	FRONT	DEPTH	TOT LND UTS	UNIT TYPE	D T	DPTH FACT	% COND	TOT ADJ	UNIT PRICE	ADJ UNIT PRICE	LAND VALUE	OTHER ADJUSTMENTS AND NOTES	YEAR	DENSITY	DECL	FRZ	YR	CONSRV

REVIEW DATE 09/14/2022 BY HS Total Acres: 20.15 Total Land Value: 2,015,000 Market: 0 Agricultural: 0 Common: 2,015,000 PRINTED 08/06/2024 BY SYS