LOT 38
IN OR 2180/288
SEA MARSH VLG UNIT 1 PB 4/11

PETER & SARAH SNELL LVG TRUST/SNELL PETER W TRUSTE
65 SEA MARSH RD
FERNANDINA BEACH, FL 32034

2024

01-6N-29-1900-0038-0000

NASSAU COUNTY PROPERTY

BUILDING CHARACTERISTICS

ELEMENT	CD	CONSTRUCTION
Exterior Wall	16	WD FR STUC 100
Roof Structur	04	WOOD TRUSS 100
Roof Cover	03	COMP SHNGL 100
Interior Wall	05	DRYWALL 100
Interior Floo	12	HARDWOOD 90
Interior Floo	11	CLAY TILE 10
Air Condition	03	CENTRAL 100
Heating Type	04	AIR DUCTED 100
Bedrooms		3 100
Bathrooms		3 100
Frame	02	WOOD FRAME 100
Stories	1.	1. 100
Units		0 100
Quality	03	Quality Level 03

DOR CODE 0100 SINGLE FAMILY
MAP NUM | MKT AREA 10
NEIGHBORHOOD/LOC 10001.00

AREA TYPE	TOTAL GROSS AREA	PCT OF BASE	TOT ADJ AREA	SUBAREA MARKET VALUE
BAS	2,674	100	2,674	535,319
FGR	681	55	375	75,073
FOP	64	30	19	3,804
FOP	334	30	100	20,019
FSP	210	40	84	16,816
STP	10	10	1	200
UOP	210	20	42	8,408
TOTALS	4,183		3,295	659,639

MARKET ADJUSTMENTS

TYPE	MDL	EFF. AREA	TOT ADJ PTS	EFF. BASE RATE	REPL. COST NEW	AYB	EYB	ECON	FNCT		NORM	% COND
0500	11	3,295	134.1323	201.20	662,954	2022	2022	0	0	0	0.50	99.50

1 SFR CUST – 100% - 2023 Heated Area: 2674 HX Base Yr 2023

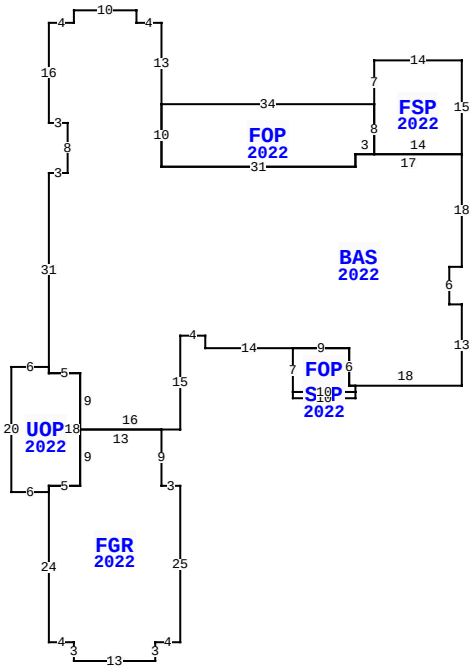

65 SEA MARSH RD, FERNANDINA BEACH

BLD DATE		LGL DATE	
XF DATE		LAND DATE	05/07/2024 MLU
INC DATE		AG DATE	

NASSAU COUNTY PROPERTY — VALUATION SUMMARY

VALUATION BY		STANDARD
Tax Group: 5	Tax Dist:	
BUILDING MARKET VALUE		659,639
TOTAL MARKET OB/XF VALUE		28,963
TOTAL LAND VALUE - MARKET		650,000
TOTAL MARKET VALUE		1,338,602
SOH/AGL Deduction		41,993
ASSESSED VALUE		1,296,609
TOTAL EXEMPTION VALUE	HX HB	50,000
BASE TAXABLE VALUE		1,246,609
TOTAL JUST VALUE		1,338,602
NCON VALUE		0
INCOME VALUE		
PREVIOUS YEAR MKT VALUE		1,258,844

PERMIT NUM	DESCRIPTION	AMT	ISSUED
21001228	CO ISSUED	0	09/21/2022
20211228	NEW CONSTR	0	03/01/2021

SALES DATA

OFF RECORD Number	DATE	TYPE INST	Q U	V I	RSN CD	SALE PRICE
2180/0288	2/27/2018	WD	Q	V	02	262,500
GRANTOR: LIMA RICARDO A & MARI						
GRANTEE: PETER & SARAH SNELL						
1582/0154	8/25/2008	WD	Q	V		425,000
GRANTOR: WILCOX CHRISTOPHER S						
GRANTEE: LIMA RICARDO A & MA						

BUILDING NOTES

BUILDING DIMENSIONS

FSP=[YR=2022] W14 S7 FOP=[YR=2022] W34 BAS=[YR=2022] N13 W4 N2 W10 S2 W4 S16 E3 S8 W3 S31 UOP=[YR=2022] W6 S20 E6 FGR=[YR=2022] S24 E4 S3 E13 N3 E4 N25 W3 N9 W13 S9 W5 S1$ N1 E5 N18 W5 N1$ S1 E5 S9 E16 N15 E4 S2 E14 FOP=[YR=2022] S7 STP=[YR=2022] S1 E10 N1 W10$ E10 N1 W1 N6 W9$ E9 S6 E18 N13 W2 N6 E2 N18 W17 S2 W31 N10$ S10 E31 N2 E3 N8$ S8 E14 N15$.

EXTRA FEATURES

LN	OB/XF CODE	DESCRIPTION	BLD	CAP	L	W	UNITS	UT	Adj R	ADJ UNIT PRICE	ORIG COND	YEAR ON	YEAR ACTUAL	Q	% COND	OB/XF MKT VALUE	NOTES
1	0504	FP-ELECTRI	0	100	0	0	1.00	UT	2,000.00	2,000.00	100	2022	2022	3	100	2,000	
2	0855	CONC PAVER	0	100	0	0	1,803.00	SF	10.00	10.00	100	2022	2022	3	100	18,030	
3	0855	CONC PAVER	0	100	0	0	526.00	SF	10.00	10.00	100	2022	2022	3	100	5,260	
4	0600	SUMMER KIT	0	100	0	0	1.00	UT	2,500.00	2,500.00	100	2022	2022	3	97	2,425	
5	1126	CB/STC 8"	0	100	0	0	156.00	SF	8.00	8.00	100	2022	2022	3	100	1,248	

LAND DESCRIPTION

TOTAL OB/XF 28,963

LN	USE CODE	CLS	LAND USE DESCRIPTION	CAP	RD	LOC ZONE	FRONT	DEPTH	TOT LND UTS	UNIT TYPE	DT	DPTH FACT	% COND	TOT ADJ	UNIT PRICE	ADJ UNIT PRICE	LAND VALUE	OTHER ADJUSTMENTS AND NOTES	YEAR	DENSITY	DECL	FRZ	YR	CONSRV
1	000140	C	SFR GOLF A	100		RSF-1	0.00	0.00	1.00	LT		1.00	1.00	1.00	650,000.00	650,000.00	650,000							

REVIEW DATE 11/15/2022 BY DJ Total Acres: 0.00 Total Land Value: 650,000 Market: 0 Agricultural: 0 Common: 650,000 PRINTED 08/06/2024 BY SYS