LOT 23
SEA MARSH VILLAGE #1 PB 4/11

HUGGINS ROGER S
9135 PRESTWICK CLUB DRIVE
JOHNS CREEK, GA 30097

2024

01-6N-29-1900-0023-0000

NASSAU COUNTY PROPERTY

BUILDING CHARACTERISTICS

ELEMENT	CD	CONSTRUCTION
Exterior Wall	10	ABOVE AVG 100
Roof Structur	03	GABLE/HIP 100
Roof Cover	03	COMP SHNGL 100
Interior Wall	05	DRYWALL 100
Interior Floo	12	HARDWOOD 70
Interior Floo	15	HARDTILE 30
Air Condition	03	CENTRAL 100
Heating Type	04	AIR DUCTED 100
Bedrooms		4 100
Bathrooms		3 100
Frame	02	WOOD FRAME 100
Stories	1.	1. 100
Units		0 100
BUD8 Adjustme	05	DIST 1A 100
Quality	04	Quality Level 04
DOR CODE	0100	SINGLE FAMILY
MAP NUM		MKT AREA 10
NEIGHBORHOOD/LOC	10001.00	

AREA TYPE	TOTAL GROSS AREA	PCT OF BASE	TOT ADJ AREA	SUBAREA MARKET VALUE
BAS	2,944	100	2,944	528,144
BAS	210	100	210	37,674
FGR	570	55	314	56,331
FOP	164	30	49	8,790
STP	10	10	1	180
STP	12	10	1	180
UOP	144	20	29	5,203
UOP	1,323	20	265	47,540
TOTALS	5,377		3,813	684,040

MARKET ADJUSTMENTS

TYPE	MDL	EFF. AREA	TOT ADJ PTS	EFF. BASE RATE	REPL. COST NEW	AYB	EYB	ECON	FNCT		NORM	% COND
0500	11	3,813	135.9072	203.86	777,318	1980	1998	0	0	0	12.00	88.00

1 SFR CUST – 100% - 2019 Heated Area: 3154 HX Base Yr 2019

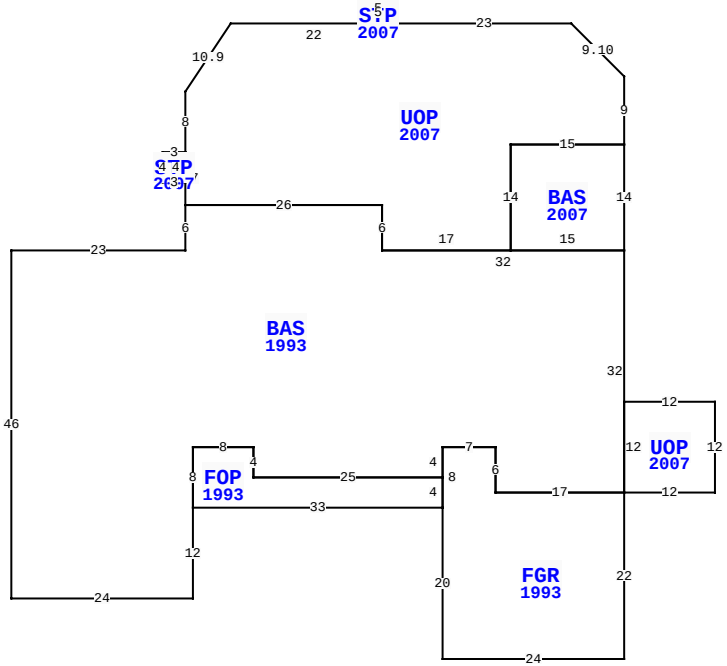

BLD DATE	02/13/2008 DJ	LGL DATE	
XF DATE		LAND DATE	05/07/2024 MLU
INC DATE		AG DATE	

17 RED MAPLE RD, FERNANDINA BEACH

NASSAU COUNTY PROPERTY — VALUATION SUMMARY

VALUATION BY		STANDARD
Tax Group: 5	Tax Dist:	
BUILDING MARKET VALUE		684,040
TOTAL MARKET OB/XF VALUE		11,133
TOTAL LAND VALUE - MARKET		650,000
TOTAL MARKET VALUE		1,345,173
SOH/AGL Deduction		585,139
ASSESSED VALUE		760,034
TOTAL EXEMPTION VALUE	HX HB	50,000
BASE TAXABLE VALUE		710,034
TOTAL JUST VALUE		1,345,173
NCON VALUE		0
INCOME VALUE		
PREVIOUS YEAR MKT VALUE		1,264,854

PERMIT NUM	DESCRIPTION	AMT	ISSUED

SALES DATA

OFF RECORD Number	DATE	TYPE INST	Q U	V I	RSN CD	SALE PRICE
2711/1456	5/14/2024	WD	Q	I	01	1,825,000
GRANTOR: HASTON HUGH B III & M						
GRANTEE: HUGGINS ROGER S						
2222/0559	9/06/2018	WD	Q	I	01	925,000
GRANTOR: PILCHER GEORGE S JR &						
GRANTEE: HASTON HIGH B III &						

BUILDING NOTES

BUILDING DIMENSIONS

UOP=[YR=2007] L7 U7 W23 STP=[YR=2007] N2 W5 S2 E5$ W22 D9 L6 S8 STP=[YR=2007] W3 S4 E3 N4$ S7 BAS=[YR=1993] S6 W23S46 E24 N12 FOP=[YR=1993] E33 FGR=[YR=1993] S20 E24 N22 W17 N6 W7 S8$ N4 W25N4 W8 S8 $ N8 E8 S4 E25 N4 E7 S6 E17 UOP=[YR=2007] E12 N12 W12 S12$ N32 BAS=[YR=2007] N14 W15 S14 E15$ W32 N6 W26$ E26 S6 E17 N14 E15 N9$.

EXTRA FEATURES

LN	OB/XF CODE	DESCRIPTION	BLD	CAP	L	W	UNITS	UT	Adj R	ADJ UNIT PRICE	ORIG COND	YEAR ON	YEAR ACTUAL	Q	% COND	OB/XF MKT VALUE	NOTES
1	0504	FP-ELECTRI	0	100	0	0	1.00	UT	2,000.00	2,000.00	100	1980	1980	3	46.5	930	
2	0812	CONCRETE C	0	100	0	0	2,965.00	SF	4.00	4.00	100	2000	2000	3	79	9,369	
3	0830	FLAGSTONE	0	100	22	4	88.00	SF	12.00	12.00	100	2000	2000	3	79	834	

LAND DESCRIPTION

TOTAL OB/XF 11,133

LN	USE CODE	CLS	LAND USE DESCRIPTION	CAP	RD	LOC ZONE	FRONT	DEPTH	TOT LND UTS	UNIT TYPE	DT	DPTH FACT	% COND	TOT ADJ	UNIT PRICE	ADJ UNIT PRICE	LAND VALUE	OTHER ADJUSTMENTS AND NOTES	YEAR	DENSITY	DECL	FRZ	YR	CONSRV
1	000140	C	SFR GOLF A	100		RSF-1	0.00	0.00	1.00	LT		1.00	1.00	1.00	650,000.00	650,000.00	650,000							

REVIEW DATE 11/01/2019 BY DJA Total Acres: 0.00 Total Land Value: 650,000 Market: 0 Agricultural: 0 Common: 650,000 PRINTED 08/06/2024 BY SYS