LOT 6
SEA MARSH VILLAGE 1 PB 4/11

LONG ROBERT B LIVING TRUST/LONG ROBERT B TRUSTEE
8 RED MAPLE ROAD
FERNANDINA BEACH, FL 32034

2024

01-6N-29-1900-0006-0000

NASSAU COUNTY PROPERTY

BUILDING CHARACTERISTICS

ELEMENT	CD	CONSTRUCTION
Exterior Wall	16	WD FR STUC 100
Roof Structur	03	GABLE/HIP 100
Roof Cover	03	COMP SHNGL 100
Interior Wall	05	DRYWALL 100
Interior Floo	14	CARPET 70
Interior Floo	11	CLAY TILE 30
Air Condition	03	CENTRAL 100
Heating Type	04	AIR DUCTED 100
Bedrooms		3 100
Bathrooms		2.5 100
Frame	02	WOOD FRAME 100
Stories	2.	2. 100
Units		0 100
Occupancy	00	NONE 100
Quality	04	Quality Level 04
DOR CODE	0100	SINGLE FAMILY
MAP NUM		MKT AREA 10
NEIGHBORHOOD/LOC	10001.00	

AREA TYPE	TOTAL GROSS AREA	PCT OF BASE	TOT ADJ AREA	SUBAREA MARKET VALUE
BAS	2,462	100	2,462	346,167
DCK	190	10	19	2,671
FGR	478	55	263	36,978
FOP	88	30	26	3,656
FUS	283	100	283	39,791
SFB	144	80	115	16,169
TOTALS	3,645		3,168	445,433

MARKET ADJUSTMENTS

TYPE	MDL	EFF. AREA	TOT ADJ PTS	EFF. BASE RATE	REPL. COST NEW	AYB	EYB	ECON	FNCT		NORM	% COND
0500	01	3,168	107.1294	160.69	509,066	1994	1998	0	0	0	12.50	87.50

1 SFR CUST – 0% - 0 Heated Area: 2860 HX Base Yr

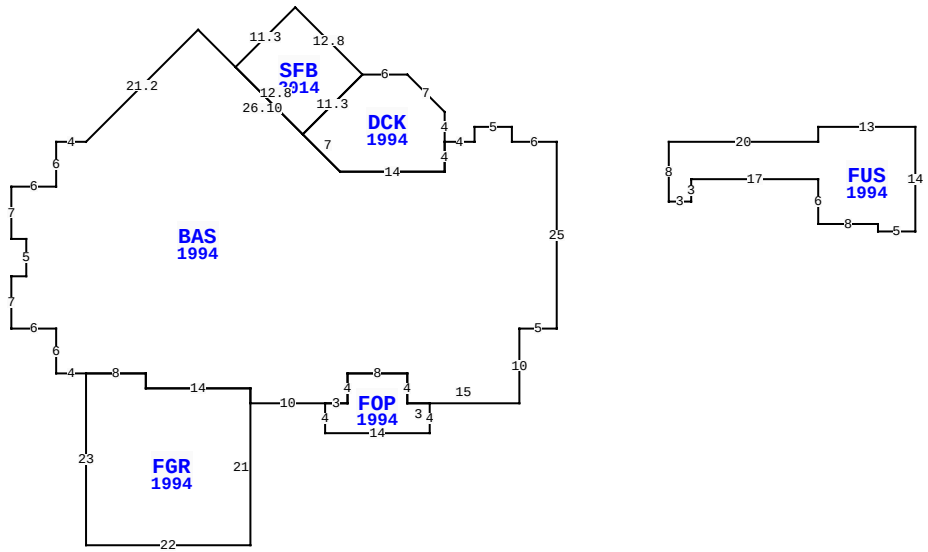

8 RED MAPLE RD, FERNANDINA BEACH

BLD DATE		LGL DATE	
XF DATE		LAND DATE	03/14/2024 MLU
INC DATE		AG DATE	

VALUATION SUMMARY

VALUATION BY	STANDARD
Tax Group: 5	Tax Dist:
BUILDING MARKET VALUE	445,433
TOTAL MARKET OB/XF VALUE	9,756
TOTAL LAND VALUE - MARKET	500,000
TOTAL MARKET VALUE	955,189
SOH/AGL Deduction	183,546
ASSESSED VALUE	771,643
TOTAL EXEMPTION VALUE	0
BASE TAXABLE VALUE	771,643
TOTAL JUST VALUE	955,189
NCON VALUE	0
INCOME VALUE	
PREVIOUS YEAR MKT VALUE	885,610

PERMIT NUM	DESCRIPTION	AMT	ISSUED
B9400979	NEW CONSTR	141,000	04/01/1994

SALES DATA

OFF RECORD Number	DATE	TYPE INST	Q U	V I	RSN CD	SALE PRICE
2355/0038	3/31/2020	QC	U	I	11	100
GRANTOR: LONG ROBERT BRANTLEY						
GRANTEE: LONG ROBERT BRANTLE						
2320/1571	11/20/2019	WD	Q	I	01	615,000
GRANTOR: LIEBENDORFER EMELIE						
GRANTEE: LONG ROBERT BRANTLE						

BUILDING NOTES

BUILDING DIMENSIONS

BAS=[YR=1994] W6 N2 W5 S2 W4 DCK=[YR=1994] N4 L5 U5 W6 SFB=[YR=2014] U9 L9 D8 L8 D9 R9 U8 R8 $ D8 L8 D5 R5 E14 N4$ S4 W14 U19 L19 L15 D15 W4 S6 W6 S7 E2 S5 W2 S7 E6 S6 E4 FGR=[YR=1994] S23 E22 N21 W14 N2 W8$ E8 S2 E14 S2 E10 FOP=[YR=1994] S4 E14 N4 W3 N4 W8 S4 W3$ E3 N4 E8 S4 E15 N10 E5 N25$ PTR=E15 FUS=[YR=1994] E20 N2 E13 S14 W5 N1 W8 N6 W17 S3 W3 N8$ W15$.

EXTRA FEATURES

LN	OB/XF CODE	DESCRIPTION	BLD	CAP	L	W	UNITS	UT	Adj R	ADJ UNIT PRICE	ORIG COND	YEAR ON	YEAR ACTUAL	Q	% COND	OB/XF MKT VALUE	NOTES
1	0504	FP-ELECTRI	0	0	0	0	1.00	UT	2,000.00	2,000.00	100	1994	1994	3	76	1,520	
2	0812	CONCRETE C	0	0	0	0	1,816.00	SF	4.00	4.00	100	1994	1994	3	68	4,940	
3	0810	CONCRETE A	0	0	0	0	225.00	SF	6.50	6.50	100	1994	1994	3	68	995	
4	1126	CB/STC 8"	0	0	0	0	323.00	SF	8.00	8.00	100	1994	1994	3	68	1,757	
5	0810	CONCRETE A	0	0	0	0	123.00	SF	6.50	6.50	100	1994	1994	3	68	544	

LAND DESCRIPTION

TOTAL OB/XF 9,756

LN	USE CODE	CLS	LAND USE DESCRIPTION	CAP	RD	LOC ZONE	FRONT	DEPTH	TOT LND UTS	UNIT TYPE	DT	DPTH FACT	% COND	TOT ADJ	UNIT PRICE	ADJ UNIT PRICE	LAND VALUE	OTHER ADJUSTMENTS AND NOTES	YEAR	DENSITY	DECL	FRZ	YR	CONSRV
1	000100	C	SFR	0		RSF-1	0.00	0.00	1.00	LT		1.00	1.00	1.00	500,000.00	500,000.00	500,000							

REVIEW DATE 04/24/2020 BY DJA Total Acres: 0.00 Total Land Value: 500,000 Market: 0 Agricultural: 0 Common: 500,000 PRINTED 08/06/2024 BY SYS