LOT 5
SEA MARSH VILLAGE 1 PB 4/11

WATSON NANCY JEANNE LIVING TRUST/WATSON NANCY JEAN
6 RED MAPLE RD
FERNANDINA BEACH, FL 32034

2024

01-6N-29-1900-0005-0000

NASSAU COUNTY PROPERTY

BUILDING CHARACTERISTICS

ELEMENT	CD	CONSTRUCTION
Exterior Wall	10	ABOVE AVG 100
Roof Structur	08	IRREGULAR 100
Roof Cover	03	COMP SHNGL 100
Interior Wall	05	DRYWALL 100
Interior Floo	12	HARDWOOD 80
Interior Floo	11	CLAY TILE 20
Air Condition	03	CENTRAL 100
Heating Type	04	AIR DUCTED 100
Bedrooms		4 100
Bathrooms		3.5 100
Frame	02	WOOD FRAME 100
Stories	1.5	1.5 100
Units		0 100
Quality	05	Quality Level 05
DOR CODE	0100	SINGLE FAMILY
MAP NUM		MKT AREA 10
NEIGHBORHOOD/LOC	10001.00	

AREA TYPE	TOTAL GROSS AREA	PCT OF BASE	TOT ADJ AREA	SUBAREA MARKET VALUE
BAS	2,349	100	2,349	509,792
FGR	679	55	373	80,950
FOP	256	30	77	16,711
FSP	234	40	94	20,400
FUS	440	100	440	95,492
STR	52	10	5	1,085
TOTALS	4,010		3,338	724,430

MARKET ADJUSTMENTS

TYPE	MDL	EFF. AREA	TOT ADJ PTS	EFF. BASE RATE	REPL. COST NEW	AYB	EYB	ECON	FNCT		NORM	% COND
0500	11	3,338	148.3923	222.59	743,005	2017	2017	0	0	0	2.50	97.50

1 SFR CUST – 100% - 2022 Heated Area: 2789 HX Base Yr 2022

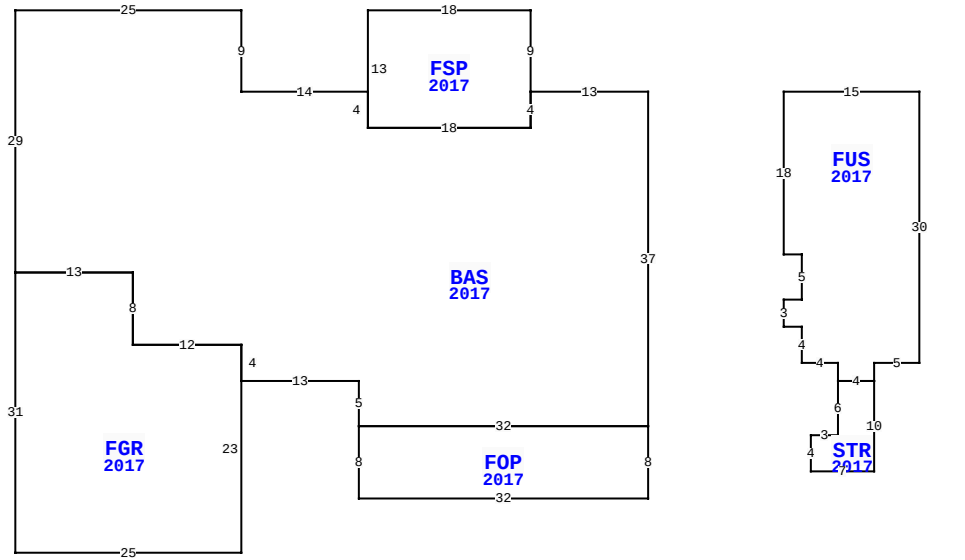

6 RED MAPLE RD, FERNANDINA BEACH

BLD DATE		LGL DATE	
XF DATE		LAND DATE	03/14/2024 MLU
INC DATE		AG DATE	

VALUATION SUMMARY

VALUATION BY		STANDARD
Tax Group: 5	Tax Dist:	
BUILDING MARKET VALUE		724,430
TOTAL MARKET OB/XF VALUE		96,772
TOTAL LAND VALUE - MARKET		500,000
TOTAL MARKET VALUE		1,321,202
SOH/AGL Deduction		213,252
ASSESSED VALUE		1,107,950
TOTAL EXEMPTION VALUE	HX HB	50,000
BASE TAXABLE VALUE		1,057,950
TOTAL JUST VALUE		1,321,202
NCON VALUE		0
INCOME VALUE		
PREVIOUS YEAR MKT VALUE		1,241,496

PERMIT NUM	DESCRIPTION	AMT	ISSUED
B1708191	SCRNRM	51,549	09/15/2017
B1708192	SWIM POOL	38,000	09/15/2017
17002091	CO ISSUED	0	03/15/2017
B1632760	NEW CONSTR	357,893	07/01/2016

SALES DATA

OFF RECORD Number	DATE	TYPE INST	Q U	V I	RSN CD	SALE PRICE
2636/763	4/27/2023	SW	U	I	11	100
GRANTOR: WATSON NANCY J						
GRANTEE: WATSON NANCY JEANNE						
2474/0322	6/25/2021	WD	Q	I	01	1,265,000
GRANTOR: SHEVER AMY R & DANIEL						
GRANTEE: WATSON NANCY J						

BUILDING NOTES

BUILDING DIMENSIONS

BAS=[YR=2017] W13 FSP=[YR=2017] N9 W18 S13 E18 N4$ S4 W18 N4 W14 N9 W25 S29 FGR=[YR=2017] S31 E25 N23 W12 N8 W13$ E13 S8 E12 S4 E13 S5 FOP=[YR=2017] S8 E32 N8 W32$ E32 N37 $ PTR=E15 FUS=[YR=2017] E15 S30 W5 S2 STR=[YR=2017] S10 W7 N4 E3 N6 E4$ W4 N2 W4 N4 W2 N3 E2 N5 W2 N18 $ W15$.

EXTRA FEATURES

LN	OB/XF CODE	DESCRIPTION	BLD	CAP	L	W	UNITS	UT	Adj R	ADJ UNIT PRICE	ORIG COND	YEAR ON	YEAR ACTUAL	Q	% COND	OB/XF MKT VALUE	NOTES
1	0855	CONC PAVER	0	100	0	0	1,917.00	SF	7.00	7.00	100	2017	2017	3	97	13,016	
2	0855	CONC PAVER	0	100	0	0	237.00	SF	7.00	7.00	100	2017	2017	3	97	1,609	
3	0855	CONC PAVER	0	100	0	0	1,546.00	SF	7.00	7.00	100	2017	2017	3	97	10,497	
4	0600	SUMMER KIT	0	100	0	0	1.00	UT	5,000.00	5,000.00	100	2017	2017	3	78	3,900	
5	1075	TRELLIS G	0	100	15	15	225.00	SF	28.00	28.00	100	2017	2017	3	84	5,292	
6	0810	CONCRETE A	0	100	6	12	72.00	SF	6.50	6.50	100	2017	2017	3	97	454	
7	0855	CONC PAVER	0	100	0	0	414.00	SF	7.00	7.00	100	2017	2017	3	97	2,811	
8	0861	POOL GUNIT	0	100	0	0	392.00	SF	85.00	85.00	100	2017	2017	3	84	27,989	
9	0911	SCRN RM A	0	100	0	0	2,286.00	SF	17.50	17.50	100	2017	2017	3	78	31,204	

LAND DESCRIPTION

TOTAL OB/XF 96,772

LN	USE CODE	CLS	LAND USE DESCRIPTION	CAP	RD	LOC ZONE	FRONT	DEPTH	TOT LND UTS	UNIT TYPE	DT	DPTH FACT	% COND	TOT ADJ	UNIT PRICE	ADJ UNIT PRICE	LAND VALUE	OTHER ADJUSTMENTS AND NOTES	YEAR	DENSITY	DECL	FRZ	YR	CONSRV
1	000100	C	SFR	100		RSF-1	0.00	0.00	1.00	LT		1.00	1.00	1.00	500,000.00	500,000.00	500,000							

REVIEW DATE 05/12/2019 BY KBA Total Acres: 0.00 Total Land Value: 500,000 Market: 0 Agricultural: 0 Common: 500,000 PRINTED 08/06/2024 BY SYS