LOT 193
IN OR 2149/529
MARSH CREEK VILLAGE 3 PB 4/40

PALMER GARY R & MARY E
56 MARSH CREEK ROAD
FERNANDINA BEACH, FL 32034

2024

01-6N-29-1330-0193-0000

NASSAU COUNTY PROPERTY

BUILDING CHARACTERISTICS

ELEMENT	CD	CONSTRUCTION
Exterior Wall	16	WD FR STUC 100
Roof Structur	08	IRREGULAR 100
Roof Cover	03	COMP SHNGL 100
Interior Wall	05	DRYWALL 100
Interior Floo	12	HARDWOOD 60
Interior Floo	14	CARPET 40
Air Condition	03	CENTRAL 100
Heating Type	04	AIR DUCTED 100
Bedrooms		4 100
Bathrooms		3.5 100
Frame	02	WOOD FRAME 100
Stories	2.	2. 100
Units		0 100
Occupancy	00	NONE 100
Quality	04	Quality Level 04
DOR CODE	0100	SINGLE FAMILY
MAP NUM		MKT AREA 10
NEIGHBORHOOD/LOC	10001.00	

AREA TYPE	TOTAL GROSS AREA	PCT OF BASE	TOT ADJ AREA	SUBAREA MARKET VALUE
BAS	2,429	100	2,429	326,152
FGR	793	55	436	58,543
FOP	135	30	40	5,371
FOP	175	30	52	6,982
FOP	408	30	122	16,381
FST	25	55	14	1,880
FST	25	55	14	1,880
FUS	769	100	769	103,257
SFB	572	80	458	61,497
STP	70	10	7	940
TOTALS	5,871		4,436	595,639

MARKET ADJUSTMENTS

TYPE	MDL	EFF. AREA	TOT ADJ PTS	EFF. BASE RATE	REPL. COST NEW	AYB	EYB	ECON	FNCT		NORM	% COND
0500	01	4,436	103.4880	155.23	688,600	1996	1996	0	0	0	13.50	86.50

1 SFR CUST – 100% - 1997 Heated Area: 3656 HX Base Yr 1997

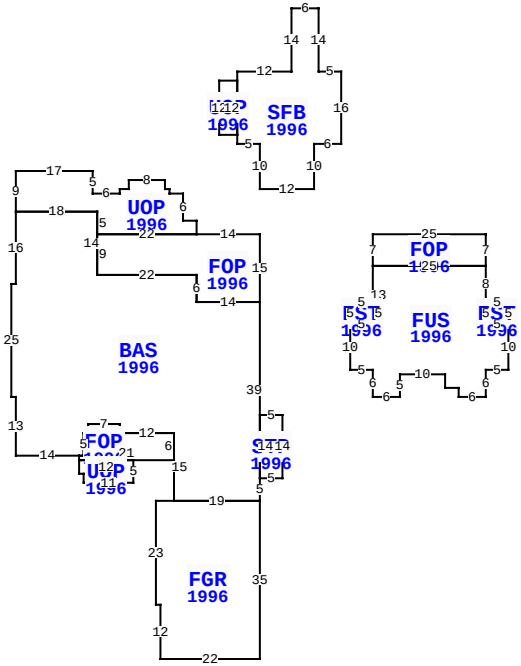

** This building has 13 Sub-Areas

56 MARSH CREEK RD, FERNANDINA BEACH

BLD DATE		LGL DATE	
XF DATE		LAND DATE	
INC DATE		AG DATE	

VALUATION SUMMARY

VALUATION BY		STANDARD
Tax Group: 5	Tax Dist:	
BUILDING MARKET VALUE		595,639
TOTAL MARKET OB/XF VALUE		35,025
TOTAL LAND VALUE - MARKET		600,000
TOTAL MARKET VALUE		1,230,664
SOH/AGL Deduction		463,222
ASSESSED VALUE		767,442
TOTAL EXEMPTION VALUE	HX HB	50,000
BASE TAXABLE VALUE		717,442
TOTAL JUST VALUE		1,230,664
NCON VALUE		0
INCOME VALUE		
PREVIOUS YEAR MKT VALUE		1,204,880

PERMIT NUM	DESCRIPTION	AMT	ISSUED
B9502237	NEW CONSTR	171,000	09/01/1995

SALES DATA

OFF RECORD Number	DATE	TYPE INST	Q / U	V / I	RSN CD	SALE PRICE
2149/0529	9/27/2017	WD	U	I	11	100
GRANTOR: PALMER GARY R & MARY						
GRANTEE: PALMER GARY R & MAR						
1573/0900	6/24/2008	WD	U	I	07	100
GRANTOR: PALMER GARY R & MARY						
GRANTEE: PALMER GARY R & MAR						

BUILDING NOTES

BUILDING DIMENSIONS

FOP=[YR=1996] W14 UOP=[YR=1996] N3 W3 N6 W3 N1 W1 N2 W8 S2 W2 S1 W6 N5 W17 S9 BAS=[YR=1996] S16 W1 S25 E1 S13 E14 FOP=[YR=1996] S1 UOP=[YR=1996] S3 E1 S2 E11 N5 W12$ E21 N6 W12 N2 W7 S2 W1 S5 W1$ E1 N5 E1 N2 E7 S2 E12 S15 FGR=[YR=1996] W4 S23 E1 S12 E22 N35 W19$ E19 N5 STP=[YR=1996] E5 N14 W5 S14$ N39 W14 N6 W22 N14 W18$ E18 S5 E22$ W22 S9 E22 S6 E14 N15$ PTR=E25 FOP=[YR=1996] E25 S7 FUS=[YR=1996] S8 FST=[YR=1996] E5 S5 W5 N5$ S5 E5 S10 W5 S6 W6 N2 W3 N3 W10 S5 W6 N6 W5 N10 FST=[YR=1996] N5 E5 S5 W5$ E5 N13 E25$ W25 N7$ W25$ PTR=N10 SFB=[YR=1996] N10 W5 N2 UOP=[YR=1996] W4 N12E4 S12$ N14 E12 N14 E6 S14 E5 S16 W6 S10 W12$ S10$.

EXTRA FEATURES

LN	OB/XF CODE	DESCRIPTION	BLD	CAP	L	W	UNITS	UT	Adj R	ADJ UNIT PRICE	ORIG COND	YEAR ON	YEAR ACTUAL	Q	% COND	OB/XF MKT VALUE	NOTES
1	0504	FP-ELECTRI	0	100	0	0	1.00	UT	2,000.00	2,000.00	100	1996	1996	3	79	1,580	
2	0858	SCULP CONC	0	100	0	0	1,771.00	SF	13.00	13.00	100	1996	1996	3	91	20,951	
3	0810	CONCRETE A	0	100	0	0	203.00	SF	6.50	6.50	100	1996	1996	3	72	950	
4	1126	CB/STC 8"	0	100	0	0	138.00	SF	8.00	8.00	100	1996	1996	3	72	795	
5	0300	BOAT DCK W	0	100	0	0	894.00	SF	40.00	40.00	100	1996	1996	3	24	8,582	
6	1242	WD DECK A	0	100	6	3	18.00	SF	10.00	10.00	100	1996	1996	3	20	36	
7	0300	BOAT DCK W	0	100	0	0	165.00	SF	40.00	40.00	100	1996	1996	3	24	1,584	
8	0300	BOAT DCK W	0	100	19	3	57.00	SF	40.00	40.00	100	1996	1996	3	24	547	

LAND DESCRIPTION

TOTAL OB/XF 35,025

LN	USE CODE	CLS	LAND USE DESCRIPTION	CAP	RD	LOC ZONE	FRONT	DEPTH	TOT LND UTS	UNIT TYPE	DT	DPTH FACT	% COND	TOT ADJ	UNIT PRICE	ADJ UNIT PRICE	LAND VALUE	OTHER ADJUSTMENTS AND NOTES	YEAR	DENSITY	DECL	FRZ	YR	CONSRV
1	000130	C	SFR WATER	100		RSF-1	0.00	0.00	1.00	LT		1.00	1.00	0.80	750,000.00	600,000.00	600,000							

REVIEW DATE 05/12/2019 BY KBA Total Acres: 0.00 Total Land Value: 600,000 Market: 0 Agricultural: 0 Common: 600,000 PRINTED 08/06/2024 BY SYS