LOT 187
MARSH CREEK VILLAGE 3 PB 4/40

DEROY VIRGINIA E TRUST/DEROY VIRGINIA E TRUSTEE
44 MARSH CREEK RD
FERNANDINA BEACH, FL 32034

2024

01-6N-29-1330-0187-0000

BUILDING CHARACTERISTICS

ELEMENT	CD	CONSTRUCTION
Exterior Wall	12	CEDAR 100
Roof Structur	03	GABLE/HIP 100
Roof Cover	10	WD SHINGLE 100
Interior Wall	05	DRYWALL 80
Interior Wall	06	CUST PANEL 20
Interior Floo	12	HARDWOOD 70
Interior Floo	14	CARPET 30
Air Condition	03	CENTRAL 100
Heating Type	04	AIR DUCTED 100
Bedrooms		4 100
Bathrooms		4 100
Frame	02	WOOD FRAME 100
Stories	2.	2. 100
Units		0 100
BUD8 Adjustme	05	DIST 1A 100
Occupancy	00	NONE 100
Quality	04	Quality Level 04
DOR CODE	0100	SINGLE FAMILY
MAP NUM		MKT AREA 10
NEIGHBORHOOD/LOC	10001.00	

AREA TYPE	TOTAL GROSS AREA	PCT OF BASE	TOT ADJ AREA	SUBAREA MARKET VALUE
BAS	115	100	115	15,818
DCK	30	10	3	413
DCK	425	10	42	5,777
FCP	322	25	80	11,003
FGR	368	55	202	27,784
FOP	57	30	17	2,338
FOP	120	30	36	4,951
FOP	74	30	22	3,026
FUS	1,558	100	1,558	214,296
FUS	84	100	84	11,554
TOTALS	5,015		3,462	476,181

MARKET ADJUSTMENTS

TYPE	MDL	EFF. AREA	TOT ADJ PTS	EFF. BASE RATE	REPL. COST NEW	AYB	EYB	ECON	FNCT		NORM	% COND
0500	01	3,462	117.5622	176.34	610,489	1979	1979	0	0	0	22.00	78.00

1 SFR CUST – 100% - 2014 Heated Area: 3042 HX Base Yr 2014

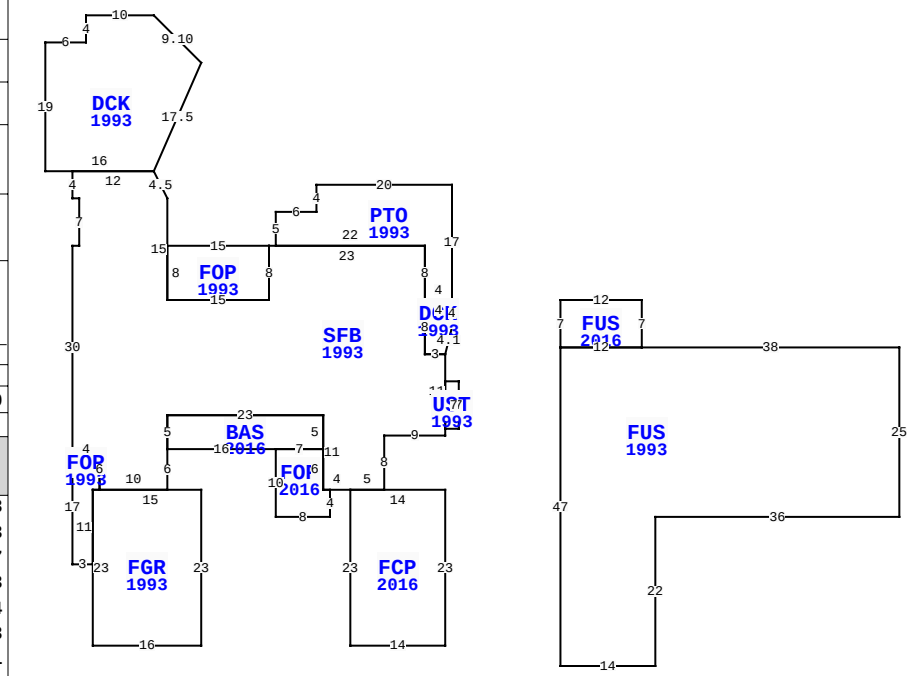

** This building has 13 Sub-Areas

44 MARSH CREEK RD, FERNANDINA BEACH

BLD DATE		LGL DATE	
XF DATE		LAND DATE	
INC DATE		AG DATE	

NASSAU COUNTY PROPERTY

PAGE 1 of 2 5

VALUATION SUMMARY

VALUATION BY		STANDARD
Tax Group: 5	Tax Dist:	
BUILDING MARKET VALUE		476,181
TOTAL MARKET OB/XF VALUE		32,028
TOTAL LAND VALUE - MARKET		675,000
TOTAL MARKET VALUE		1,183,209
SOH/AGL Deduction		239,575
ASSESSED VALUE		943,634
TOTAL EXEMPTION VALUE	HX HB WX	55,000
BASE TAXABLE VALUE		888,634
TOTAL JUST VALUE		1,183,209
NCON VALUE		0
INCOME VALUE		
PREVIOUS YEAR MKT VALUE		1,163,118

PERMIT NUM	DESCRIPTION	AMT	ISSUED
B1531555	ADD194	29,771	12/01/2015
M1217460	H/AC	0	08/01/2012
E23186	CHNGE SRVC	0	01/01/2011
8388	REMODEL	46,000	09/16/1992

SALES DATA

OFF RECORD Number	DATE	TYPE INST	Q / U	V / I	RSN CD	SALE PRICE
2594/0226	9/21/2022	WD	U	I	11	100
GRANTOR: DEROY VIRGINIA E						
GRANTEE: DEROY VIRGINIA E TR						
0655/0288	4/21/1992	WD	Q	I		405,000
GRANTOR: LORICK WM & DABNEY						
GRANTEE: DEROY MICHAEL & V						

BUILDING NOTES

BUILDING DIMENSIONS

PTO=[YR=1993] E4N17W20S4W6S5E22S8$ SFB=[YR=1993] N8W23FOP=[YR=1993] W15S8E15 N8$S8W15N15 U4 L2 DCK=[YR=1993] U16 R7 U7 L7 W10S4W6S19E16$W12S4E1 S7W1S30FOP=[YR=1993] S17E3N11E1N6W4$ E4S6FGR=[YR=1993] W1S23E16N23W15$E10 N6BAS=[YR=2016] E16 FOP=[YR=2016] S10 E8 N4 W1 N6 W7$ E7 N5 W23 S5$ N5 E23 S11 E4 FCP=[YR=2016] S23 E14 N23 W14$ E5 N8E9N1UST=[YR=1993] E2N7W2S7 $N11W3N8$DCK=[YR=1993] S8E3 U4 R1 N4 W4$ PTR=E20 FUS=[YR=2016] E12 S7 FUS=[YR=1993] E38 S25 W36 S22 W14 N47 E12$ W12 N7$ W20$.

EXTRA FEATURES

L N	OB/XF CODE	DESCRIPTION	BLD	CAP	L	W	UNITS	UT	Adj R	ADJ UNIT PRICE	ORIG COND	YEAR ON	YEAR ACTUAL	Q	% COND	OB/XF MKT VALUE	NOTES
1	0861	POOL GUNIT	0	100	30	16	480.00	SF	85.00	85.00	100	1979	1979	3	20	8,160	
2	0850	PEBBLE WLK	0	100	0	0	1,191.00	SF	3.50	3.50	100	1979	1979	3	30	1,251	
3	0504	FP-ELECTRI	0	100	0	0	2.00	UT	2,000.00	2,000.00	100	1979	1979	3	44	1,760	
4	0300	BOAT DCK W	0	100	90	4	360.00	SF	40.00	40.00	100	2002	2002	3	30	4,320	
5	0825	BRICK	0	100	0	0	519.00	SF	12.50	12.50	100	1985	1985	3	81	5,255	
6	1075	TRELLIS G	0	100	0	0	225.00	SF	35.00	35.00	100	1985	1985	3	20	1,575	
7	0825	BRICK	0	100	0	0	687.00	SF	12.50	12.50	100	1985	1985	3	81	6,956	
8	0311	WD GANG WY	0	100	0	0	20.00	SF	45.00	45.00	100	2002	2002	3	20	180	
9	0317	DCK PLNG W	0	100	0	0	2.00	UT	500.00	500.00	100	2002	2002	3	20	200	
10	0920	CWALL-WD/M	0	100	0	0	16.00	LF	390.00	390.00	100	2002	2002	3	20	1,248	

TOTAL OB/XF 30,905

LAND DESCRIPTION

L N	USE CODE	CLS	LAND USE DESCRIPTION	CAP	R D	LOC ZONE	FRONT	DEPTH	TOT LND UTS	UNIT TYPE	D T	DPTH FACT	% COND	TOT ADJ	UNIT PRICE	ADJ UNIT PRICE	LAND VALUE	OTHER ADJUSTMENTS AND NOTES	YEAR	DENSITY	DECL	FRZ	YR	CONSRV
1	000130	C	SFR WATER	100		RSF-1	0.00	0.00	1.00	LT		1.00	1.00	0.90	750,000.00	675,000.00	675,000							

REVIEW DATE 05/12/2019 BY KBA Total Acres: 0.00 Total Land Value: 675,000 Market: 0 Agricultural: 0 Common: 675,000 PRINTED 08/06/2024 BY SYS

LOT 187
MARSH CREEK VILLAGE 3 PB 4/40

DEROY VIRGINIA E TRUST/DEROY VIRGINIA E TRUSTEE
44 MARSH CREEK RD
FERNANDINA BEACH, FL 32034

2024

01-6N-29-1330-0187-0000

NASSAU COUNTY PROPERTY

BUILDING CHARACTERISTICS

ELEMENT	CD	CONSTRUCTION

DOR CODE	0100	SINGLE FAMILY	
MAP NUM		MKT AREA	10
NEIGHBORHOOD/LOC	10001.00		

AREA TYPE	TOTAL GROSS AREA	PCT OF BASE	TOT ADJ AREA	SUBAREA MARKET VALUE
TOTALS				

MARKET ADJUSTMENTS

TYPE	MDL	EFF. AREA	TOT ADJ PTS	EFF. BASE RATE	REPL. COST NEW	AYB	EYB	ECON	FNCT		NORM	% COND

BLD DATE		LGL DATE	
XF DATE		LAND DATE	
INC DATE		AG DATE	

VALUATION SUMMARY

VALUATION BY		STANDARD
Tax Group: 5	Tax Dist:	
BUILDING MARKET VALUE		476,181
TOTAL MARKET OB/XF VALUE		32,028
TOTAL LAND VALUE - MARKET		675,000
TOTAL MARKET VALUE		1,183,209
SOH/AGL Deduction		239,575
ASSESSED VALUE		943,634
TOTAL EXEMPTION VALUE	HX HB WX	55,000
BASE TAXABLE VALUE		888,634
TOTAL JUST VALUE		1,183,209
NCON VALUE		0
INCOME VALUE		
PREVIOUS YEAR MKT VALUE		1,163,118

PERMIT NUM	DESCRIPTION	AMT	ISSUED

SALES DATA

OFF RECORD Number	DATE	TYPE INST	Q / U	V / I	RSN CD	SALE PRICE
2594/0226	9/21/2022	WD	U	I	11	100
GRANTOR: DEROY VIRGINIA E						
GRANTEE: DEROY VIRGINIA E TR						
0655/0288	4/21/1992	WD	Q	I		405,000
GRANTOR: LORICK WM & DABNEY						
GRANTEE: DEROY MICHAEL & V						

BUILDING NOTES

BUILDING DIMENSIONS

EXTRA FEATURES

LN	OB/XF CODE	DESCRIPTION	BLD	CAP	L	W	UNITS	UT	Adj R	ADJ UNIT PRICE	ORIG COND	YEAR ON	YEAR ACTUAL	Q	% COND	OB/XF MKT VALUE	NOTES
11	0303	FLT DOCK W	0	100	18	8	144.00	SF	26.00	26.00	100	2002	2002	3	30	1,123	

LAND DESCRIPTION

TOTAL OB/XF 1,123

LN	USE CODE	CLS	LAND USE DESCRIPTION	CAP	RD	LOC ZONE	FRONT	DEPTH	TOT LND UTS	UNIT TYPE	DT	DPTH FACT	% COND	TOT ADJ	UNIT PRICE	ADJ UNIT PRICE	LAND VALUE	OTHER ADJUSTMENTS AND NOTES	YEAR	DENSITY	DECL	FRZ	YR	CONSRV

REVIEW DATE 05/12/2019 BY KBA Total Acres: 0.00 Total Land Value: 675,000 Market: 0 Agricultural: 0 Common: 675,000 PRINTED 08/06/2024 BY SYS