LOT 162
MARSH CREEK VILLAGE UNIT 2-A
R/P PBK 4/24

SUTTON TRUST/SUTTON THOMAS L CO-TRUSTEE
104 SNOWY EGRET
FERNANDINA BEACH, FL 32034

2024

01-6N-29-132A-0162-0000

BUILDING CHARACTERISTICS

ELEMENT	CD	CONSTRUCTION
Exterior Wall	17	CB STUCCO 100
Roof Structur	08	IRREGULAR 100
Roof Cover	03	COMP SHNGL 100
Interior Wall	05	DRYWALL 100
Interior Floo	11	CLAY TILE 70
Interior Floo	14	CARPET 30
Air Condition	03	CENTRAL 100
Heating Type	04	AIR DUCTED 100
Bedrooms		4 100
Bathrooms		4 100
Frame	02	WOOD FRAME 100
Stories	2.	2. 100
Units		0 100
Occupancy	00	NONE 100
Quality	04	Quality Level 04
DOR CODE	0100	SINGLE FAMILY
MAP NUM		MKT AREA 10
NEIGHBORHOOD/LOC	10001.00	

AREA TYPE	TOTAL GROSS AREA	PCT OF BASE	TOT ADJ AREA	SUBAREA MARKET VALUE
BAS	3,364	100	3,364	560,036
FGR	698	55	384	63,928
FOP	66	30	20	3,329
FOP	76	30	23	3,829
FOP	110	30	33	5,494
FOP	362	30	109	18,146
FSP	606	40	242	40,288
FUS	472	100	472	78,578
PTO	9	5	0	0
UOP	16	20	3	499
TOTALS	5,903		4,675	778,289

MARKET ADJUSTMENTS

TYPE	MDL	EFF. AREA	TOT ADJ PTS	EFF. BASE RATE	REPL. COST NEW	AYB	EYB	ECON	FNCT		NORM	% COND
0500	01	4,675	124.0050	186.01	869,597	2002	2002	0	0	0	10.50	89.50

1 SFR CUST – 100% - 2004 Heated Area: 3836 HX Base Yr 2004

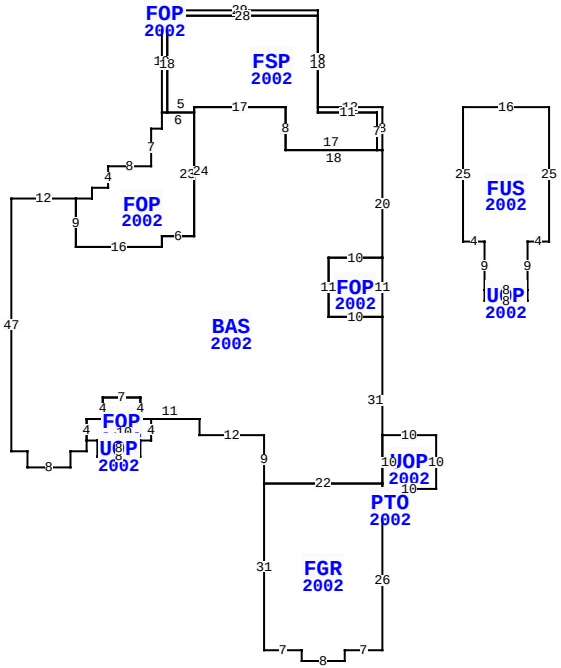

** This building has 12 Sub-Areas

104 SNOWY EGRET, FERNANDINA BEACH

BLD DATE		LGL DATE	
XF DATE		LAND DATE	05/07/2024 MLU
INC DATE		AG DATE	

NASSAU COUNTY PROPERTY

PAGE 1 of 1 5

VALUATION SUMMARY

VALUATION BY		STANDARD
Tax Group: 5	Tax Dist:	
BUILDING MARKET VALUE		778,289
TOTAL MARKET OB/XF VALUE		23,966
TOTAL LAND VALUE - MARKET		650,000
TOTAL MARKET VALUE		1,452,255
SOH/AGL Deduction		568,562
ASSESSED VALUE		883,693
TOTAL EXEMPTION VALUE	HX HB	50,000
BASE TAXABLE VALUE		833,693
TOTAL JUST VALUE		1,452,255
NCON VALUE		0
INCOME VALUE		
PREVIOUS YEAR MKT VALUE		1,367,765

PERMIT NUM	DESCRIPTION	AMT	ISSUED
E14827	ELEC OTHER	900	04/01/2005
B0108897	NEW CONSTR	375,000	10/01/2001

SALES DATA

OFF RECORD Number	DATE	TYPE INST	Q / U	V / I	RSN CD	SALE PRICE
2382/0382	7/29/2020	WD	U	I	11	100
GRANTOR: SUTTON DEBRA J & THOM						
GRANTEE: SUTTON TRUST						
1969/0837	2/11/2015	SW	U	I	30	137,500
GRANTOR: SUTTON DEBRA J						
GRANTEE: SUTTON DEBRA J & TH						

BUILDING NOTES

BUILDING DIMENSIONS

FOP=[YR=2002] W12 N18 W29 S19 FOP=[YR=2002] S3 W2 S7 W8 S4 W3 S2 W3 BAS=[YR=2002] W12 S47 E3 S3 E8 N3 E3 N2 FOP=[YR=2002] E2 UOP=[YR=2002] S3 E8 N3 W8 $ E10 N4 W2 N4 W7 S4 W3 S4 $ N4 E3 N4 E7 S4 E11 S3 E12 S9 FGR=[YR=2002] S31 E7 S2 E8 N2 E7 N26 PTO=[YR=2002] E3 N3 W3 S3 $ N4 UOP=[YR=2002] E10 N10 W10 S10 $ N1 W22 $ E22 N31 FOP=[YR=2002] N11 W10 S11 E10 $ W10 N11 E10 N20 W18 N8 W17 S24 W6 S2 W16 N9 $ S9 E16 N2 E6 N23 W6 $ E1 FSP=[YR=2002] E5 N1 E17 S8 E17 N7 W11 N18 W28 S18 $ N18 E28 S18 E11 S7 E1 N8 $ PTR= E15 FUS=[YR=2002] E16 S25 W4 S9 UOP=[YR=2002] S2 W8 N2 E8 $ W8 N9 W4 N25 $ W15 $.

EXTRA FEATURES

LN	OB/XF CODE	DESCRIPTION	BLD	CAP	L	W	UNITS	UT	Adj R	ADJ UNIT PRICE	ORIG COND	YEAR ON	YEAR ACTUAL	Q	% COND	OB/XF MKT VALUE	NOTES
1	0504	FP-ELECTRI	0	100	0	0	1.00	UT	2,000.00	2,000.00	100	2002	2002	3	86	1,720	
2	0855	CONC PAVER	0	100	0	0	2,667.00	SF	10.00	10.00	100	2002	2002	3	82	21,869	
3	0855	CONC PAVER	0	100	0	0	46.00	SF	10.00	10.00	100	2002	2002	3	82	377	

LAND DESCRIPTION

TOTAL OB/XF 23,966

LN	USE CODE	CLS	LAND USE DESCRIPTION	CAP	RD	LOC ZONE	FRONT	DEPTH	TOT LND UTS	UNIT TYPE	DT	DPTH FACT	% COND	TOT ADJ	UNIT PRICE	ADJ UNIT PRICE	LAND VALUE	OTHER ADJUSTMENTS AND NOTES	YEAR	DENSITY	DECL	FRZ	YR	CONSRV
1	000140	C	SFR GOLF A	100		RSF-1	0.00	0.00	1.00	LT		1.00	1.00	1.00	650,000.00	650,000.00	650,000							

REVIEW DATE 05/12/2019 BY KBA Total Acres: 0.00 Total Land Value: 650,000 Market: 0 Agricultural: 0 Common: 650,000 PRINTED 08/06/2024 BY SYS