LOT 149
MARSH CREEK VLG #2 PB 4/21-22

ALEXANDRE MANUEL J & KATHLEEN
95 MARSH CREEK ROAD
FERNANDINA BEACH, FL 32034

2024

01-6N-29-1320-0149-0000

BUILDING CHARACTERISTICS

ELEMENT	CD	CONSTRUCTION
Exterior Wall	10	ABOVE AVG 100
Roof Structur	08	IRREGULAR 100
Roof Cover	12	MODULAR MT 100
Interior Wall	05	DRYWALL 100
Interior Floo	11	CLAY TILE 60
Interior Floo	12	HARDWOOD 40
Air Condition	03	CENTRAL 100
Heating Type	04	AIR DUCTED 100
Bedrooms		4 100
Bathrooms		4.5 100
Frame	02	WOOD FRAME 100
Stories	2.	2. 100
Units		0 100
Occupancy	00	NONE 100
Quality	04	Quality Level 04
DOR CODE	0100	SINGLE FAMILY
MAP NUM		MKT AREA 10
NEIGHBORHOOD/LOC	10001.00	

AREA TYPE	TOTAL GROSS AREA	PCT OF BASE	TOT ADJ AREA	SUBAREA MARKET VALUE
BAS	1,560	100	1,560	167,180
FGR	605	55	333	35,686
FOP	48	30	14	1,500
FUS	998	100	998	106,952
STP	40	10	4	429
UOP	36	20	7	750
TOTALS	3,287		2,916	312,498

MARKET ADJUSTMENTS

TYPE	MDL	EFF. AREA	TOT ADJ PTS	EFF. BASE RATE	REPL. COST NEW	AYB	EYB	ECON	FNCT	AP	NORM	% COND
0500	01	2,916	123.1776	184.77	538,789	1998	1998	0	0	30	12.00	58.00

1 SFR CUST – 100% - 2020 Heated Area: 2558 HX Base Yr 2020

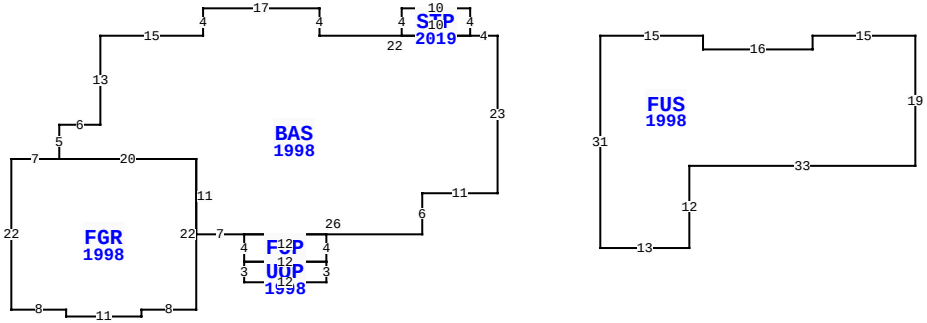

95 MARSH CREEK RD, FERNANDINA BEACH

BLD DATE		LGL DATE	
XF DATE		LAND DATE	03/14/2024 MLU
INC DATE		AG DATE	

NASSAU COUNTY PROPERTY

PAGE 1 of 1 5

VALUATION SUMMARY

VALUATION BY		STANDARD
Tax Group: 5	Tax Dist:	
BUILDING MARKET VALUE		312,498
TOTAL MARKET OB/XF VALUE		25,352
TOTAL LAND VALUE - MARKET		500,000
TOTAL MARKET VALUE		837,850
SOH/AGL Deduction		332,741
ASSESSED VALUE		505,109
TOTAL EXEMPTION VALUE	HX HB	50,000
BASE TAXABLE VALUE		455,109
TOTAL JUST VALUE		837,850
NCON VALUE		0
INCOME VALUE		
PREVIOUS YEAR MKT VALUE		774,996

PERMIT NUM	DESCRIPTION	AMT	ISSUED

SALES DATA

OFF RECORD Number	DATE	TYPE INST	Q / U	V / I	RSN CD	SALE PRICE
2289/0939	7/12/2019	WD	Q	I	01	490,000
GRANTOR: EASLEY MARGARET R & M						
GRANTEE: ALEXANDRE MANUEL J						
2248/0254	1/07/2019	FJ	U	I	11	0
GRANTOR: EASLEY CAROLINE W EST						
GRANTEE: EASLEY MARGARET R E						

BUILDING NOTES

BUILDING DIMENSIONS

BAS=[YR=1998] W4 STP=[YR=2019] N4 W10 S4 E10$ W22 N4 W17 S4 W15 S13 W6 S5 FGR=[YR=1998] W7 S22 E8 S1 E11 N1 E8 N22 W20 $ E20 S11 E7 FOP=[YR=1998] S4 UOP=[YR=1998] S3E12 N3 W12 $ E12 N4 W12 $ E26 N6 E11 N23 $ PTR= E15 FUS=[YR=1998] E15 S2 E16N2 E15 S19 W33 S12 W13 N31 $ W15 $.

EXTRA FEATURES

LN	OB/XF CODE	DESCRIPTION	BLD	CAP	L	W	UNITS	UT	Adj R	ADJ UNIT PRICE	ORIG COND	YEAR ON	YEAR ACTUAL	Q	% COND	OB/XF MKT VALUE	NOTES
1	0504	FP-ELECTRI	0	100	0	0	1.00	UT	2,000.00	2,000.00	100	1998	1998	3	81	1,620	
2	0855	CONC PAVER	0	100	0	0	2,344.00	SF	7.00	7.00	100	2014	2014	3	95	15,588	
3	0825	BRICK	0	100	0	0	131.00	SF	12.50	12.50	100	1998	1998	3	93	1,523	
4	0810	CONCRETE A	0	100	0	0	90.00	SF	6.50	6.50	100	1998	1998	3	75	439	
5	0444	BOX FNC 4'	0	100	0	0	28.00	LF	6.50	6.50	100	1998	1998	3	20	36	
6	0811	CONCRETE B	0	100	0	0	1,576.00	SF	5.20	5.20	100	1998	1998	3	75	6,146	

LAND DESCRIPTION

TOTAL OB/XF 25,352

LN	USE CODE	CLS	LAND USE DESCRIPTION	CAP	RD	LOC ZONE	FRONT	DEPTH	TOT LND UTS	UNIT TYPE	DT	DPTH FACT	% COND	TOT ADJ	UNIT PRICE	ADJ UNIT PRICE	LAND VALUE	OTHER ADJUSTMENTS AND NOTES	YEAR	DENSITY	DECL	FRZ	YR	CONSRV
1	000100	C	SFR	100		RSF-1	0.00	0.00	1.00	LT		1.00	1.00	1.00	500,000.00	500,000.00	500,000							

REVIEW DATE 02/18/2020 BY DJ Total Acres: 0.00 Total Land Value: 500,000 Market: 0 Agricultural: 0 Common: 500,000 PRINTED 08/06/2024 BY SYS