LOT 184
IN OR 1128/487
MARSH CREEK VILLAGE UNIT 1B

HUSLER KENNETH M & JULIE W
19 MARSH HAWK RD
FERNANDINA BEACH, FL 32034

2024

01-6N-29-131B-0184-0000

BUILDING CHARACTERISTICS

ELEMENT	CD	CONSTRUCTION
Exterior Wall	14	WD SHINGLE 100
Roof Structur	08	IRREGULAR 100
Roof Cover	03	COMP SHNGL 100
Interior Wall	05	DRYWALL 100
Interior Floo	14	CARPET 60
Interior Floo	12	HARDWOOD 40
Air Condition	03	CENTRAL 100
Heating Type	04	AIR DUCTED 100
Bedrooms		3 100
Bathrooms		3 100
Frame	02	WOOD FRAME 100
Stories	2.	2. 100
Units		0 100
Occupancy	00	NONE 100
Quality	04	Quality Level 04
DOR CODE	0100	SINGLE FAMILY
MAP NUM		MKT AREA 10
NEIGHBORHOOD/LOC	10001.00	

AREA TYPE	TOTAL GROSS AREA	PCT OF BASE	TOT ADJ AREA	SUBAREA MARKET VALUE
BAS	2,166	100	2,166	306,580
DCK	548	10	55	7,785
FGR	654	55	360	50,955
FOP	65	30	20	2,831
FOP	175	30	52	7,360
FOP	198	30	59	8,351
FST	90	55	50	7,078
FUS	1,585	100	1,585	224,344
UOP	24	20	5	707
UOP	72	20	14	1,982
TOTALS	5,757		4,402	623,068

MARKET ADJUSTMENTS

TYPE	MDL	EFF. AREA	TOT ADJ PTS	EFF. BASE RATE	REPL. COST NEW	AYB	EYB	ECON	FNCT		NORM	% COND
0500	01	4,402	102.5640	153.85	677,248	2007	2007	0	0	0	8.00	92.00

1 SFR CUST – 100% - 2008 Heated Area: 3751 HX Base Yr 2008

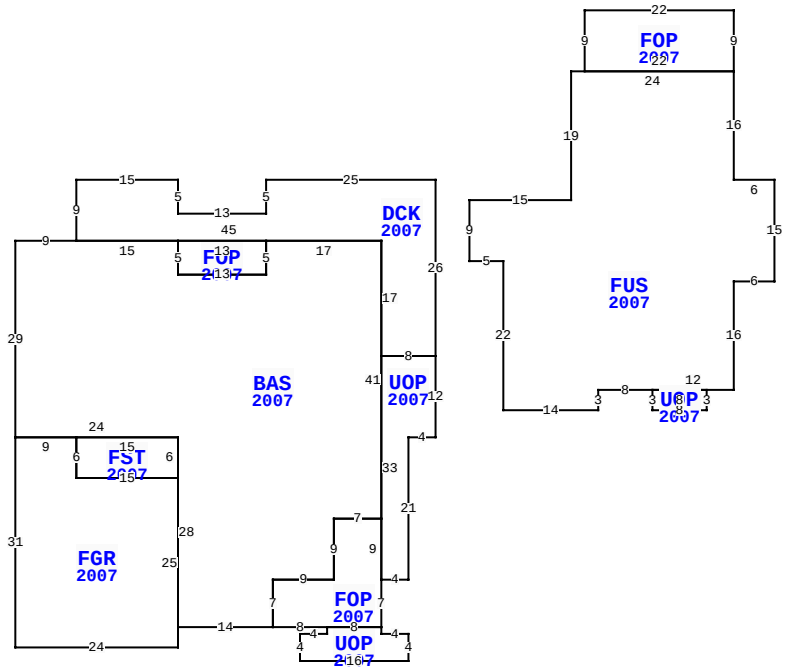

** This building has 11 Sub-Areas

19 MARSH HAWK RD, FERNANDINA BEACH

BLD DATE	10/30/2007 KK	LGL DATE	
XF DATE		LAND DATE	05/07/2024 MLU
INC DATE		AG DATE	

NASSAU COUNTY PROPERTY

PAGE 1 of 1 5

VALUATION SUMMARY

VALUATION BY		STANDARD
Tax Group: 5	Tax Dist:	
BUILDING MARKET VALUE		623,068
TOTAL MARKET OB/XF VALUE		12,877
TOTAL LAND VALUE - MARKET		650,000
TOTAL MARKET VALUE		1,285,945
SOH/AGL Deduction		615,665
ASSESSED VALUE		670,280
TOTAL EXEMPTION VALUE	HX HB	50,000
BASE TAXABLE VALUE		620,280
TOTAL JUST VALUE		1,285,945
NCON VALUE		0
INCOME VALUE		
PREVIOUS YEAR MKT VALUE		1,208,133

PERMIT NUM	DESCRIPTION	AMT	ISSUED
M12344	MECH OTHER	0	12/01/2006
E18217	ELEC OTHER	2,000	10/01/2006
P11664	OTHER	0	10/01/2006
C18467	CO ISSUED	440,000	09/01/2006
B18467	NEW CONSTR	440,000	09/01/2006
R09675	REPAIR/RRF	4,800	09/01/2006

SALES DATA

OFF RECORD Number	DATE	TYPE INST	Q / U	V / I	RSN CD	SALE PRICE
1128/0487	4/08/2003	WD	U	V	20	310,000
GRANTOR: CAVALLARO JOHN W SR &						
GRANTEE: HUSLER KENNETH M &						
0395/0576	8/01/1983	WD	Q	V		64,000
GRANTOR:						
GRANTEE:						

BUILDING NOTES

BUILDING DIMENSIONS

DCK=[YR=2007] W25 S5 W13 N5 W15 S9 BAS=[YR=2007] W9 S29 FGR=[YR=2007] S31 E24 N25 FST=[YR=2007] N6 W15 S6 E15$ W15 N6 W9$ E24 S28 E14 FOP=[YR=2007] E8 UOP=[YR=2007] S1 W4 S4 E16 N4 W4 N1 W8$ E8 N7 UOP=[YR=2007] E4 N21 E4 N12 W8 S33$ N9 W7 S9 W9 S7$ N7 E9 N9 E7 N41 W17 FOP=[YR=2007] W13 S5 E13 N5$ S5 W13 N5 W15$ E45 S17 E8 N26$ PTR=E50 FUS=[YR=2007] W6 N16 FOP=[YR=2007] N9 W22 S9 E22$ W24 S19 W15 S9 E5 S22 E14 N3 E8 UOP=[YR=2007] S3 E8 N3 W8$ E12 N16 E6 N15$ W50$.

EXTRA FEATURES

LN	OB/XF CODE	DESCRIPTION	BLD	CAP	L	W	UNITS	UT	Adj R	ADJ UNIT PRICE	ORIG COND	YEAR ON	YEAR ACTUAL	Q	% COND	OB/XF MKT VALUE	NOTES
1	0500	FP-PRE FAB	0	100	0	0	1.00	UT	3,500.00	3,500.00	100	2007	2007	3	91	3,185	
2	0855	CONC PAVER	0	100	0	0	795.00	SF	10.00	10.00	100	2007	2007	3	88	6,996	
3	0855	CONC PAVER	0	100	0	0	110.00	SF	10.00	10.00	100	2007	2007	3	88	968	
4	1242	WD DECK A	0	100	8	3	24.00	SF	10.00	10.00	100	2007	2007	3	31	74	
5	1126	CB/STC 8"	0	100	0	0	235.00	SF	8.00	8.00	100	2007	2007	3	88	1,654	

LAND DESCRIPTION

TOTAL OB/XF 12,877

LN	USE CODE	CLS	LAND USE DESCRIPTION	CAP	RD	LOC ZONE	FRONT	DEPTH	TOT LND UTS	UNIT TYPE	DT	DPTH FACT	% COND	TOT ADJ	UNIT PRICE	ADJ UNIT PRICE	LAND VALUE	OTHER ADJUSTMENTS AND NOTES	YEAR	DENSITY	DECL	FRZ	YR	CONSRV
1	000140	C	SFR GOLF A	100		RSF-1	0.00	0.00	1.00	LT		1.00	1.00	1.00	650,000.00	650,000.00	650,000							

REVIEW DATE 03/21/2023 BY DJ Total Acres: 0.00 Total Land Value: 650,000 Market: 0 Agricultural: 0 Common: 650,000 PRINTED 08/06/2024 BY SYS