LOT 99
MARSH CREEK VILLAGE 1 PB 4/18

MOTT SHARON MOUNTJOY
3 BELTED KINGFISHER
FERNANDINA BEACH, FL 32034

2024

01-6N-29-1300-0099-0000

NASSAU COUNTY PROPERTY

BUILDING CHARACTERISTICS

ELEMENT	CD	CONSTRUCTION
Exterior Wall	05	AVERAGE 100
Roof Structur	08	IRREGULAR 100
Roof Cover	03	COMP SHNGL 100
Interior Wall	05	DRYWALL 80
Interior Wall	06	CUST PANEL 20
Interior Floo	14	CARPET 60
Interior Floo	12	HARDWOOD 40
Air Condition	03	CENTRAL 100
Heating Type	04	AIR DUCTED 100
Bedrooms		5 100
Bathrooms		4.5 100
Frame	02	WOOD FRAME 100
Stories	2.5	2.5 100
Units		0 100
Quality	03	Quality Level 03
DOR CODE	0100	SINGLE FAMILY
MAP NUM		MKT AREA 10
NEIGHBORHOOD/LOC	10001.00	

AREA TYPE	TOTAL GROSS AREA	PCT OF BASE	TOT ADJ AREA	SUBAREA MARKET VALUE
BAS	2,343	100	2,343	443,901
DCK	406	10	41	7,768
FGR	599	55	329	62,331
FOP	174	30	52	9,852
FSP	168	40	67	12,694
FSP	315	40	126	23,872
FUS	2,299	100	2,299	435,566
STR	96	10	10	1,894
TOTALS	6,400		5,267	997,878

MARKET ADJUSTMENTS

TYPE	MDL	EFF. AREA	TOT ADJ PTS	EFF. BASE RATE	REPL. COST NEW	AYB	EYB	ECON	FNCT		NORM	% COND
0500	11	5,267	132.9563	199.43	1,050,398	2012	2012	0	0	0	5.00	95.00

1 SFR CUST – 100% - 2022 Heated Area: 4642 HX Base Yr 2022

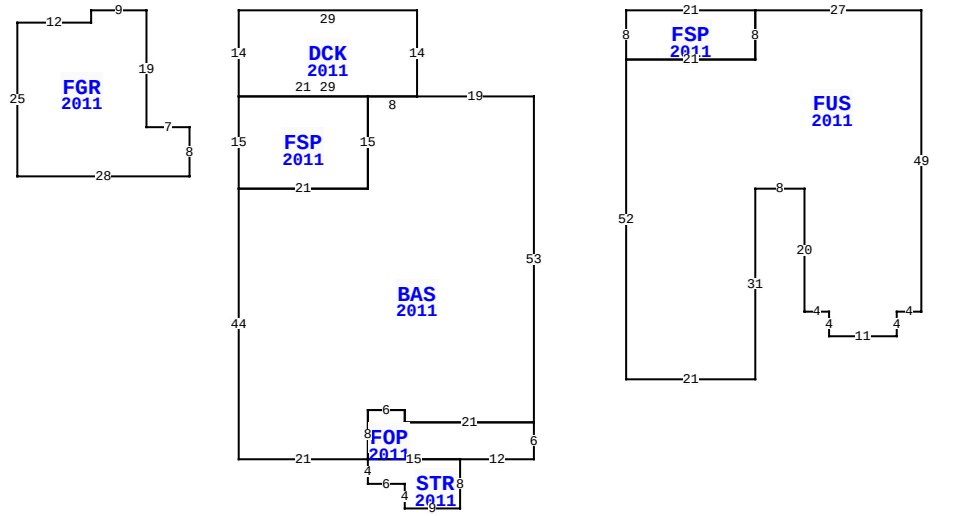

BLD DATE		LGL DATE	
XF DATE		LAND DATE	05/07/2024 MLU
INC DATE		AG DATE	

3 BELTED KINGFISHER, FERNANDINA BEACH

NASSAU COUNTY PROPERTY — VALUATION SUMMARY

VALUATION BY		STANDARD
Tax Group: 5	Tax Dist:	
BUILDING MARKET VALUE		997,878
TOTAL MARKET OB/XF VALUE		8,365
TOTAL LAND VALUE - MARKET		450,000
TOTAL MARKET VALUE		1,456,243
SOH/AGL Deduction		416,305
ASSESSED VALUE		1,039,938
TOTAL EXEMPTION VALUE	HX HB	50,000
BASE TAXABLE VALUE		989,938
TOTAL JUST VALUE		1,456,243
NCON VALUE		0
INCOME VALUE		
PREVIOUS YEAR MKT VALUE		1,311,449

PERMIT NUM	DESCRIPTION	AMT	ISSUED
CO21174	CO	0	08/06/2012
R11085	REPAIR/RRF	7,000	03/01/2008
B21174	NEW CONSTR	365,442	03/01/2008
M13676	3 TON UNIT	0	03/01/2008
P13102	OTHER	0	03/01/2008

SALES DATA

OFF RECORD Number	DATE	TYPE INST	Q / U	V / I	RSN CD	SALE PRICE
2501/0343	9/30/2021	WD	Q	I	01	1,200,000
GRANTOR: GILCHRIST LESLIE BOLI						
GRANTEE: MOTT SHARON MOUNTJO						
2278/0203	5/19/2019	QC	U	I	11	100
GRANTOR: GILCHRIST LESLIE BOLI						
GRANTEE: GILCHRIST LESLIE BO						

BUILDING NOTES

BUILDING DIMENSIONS

FGR=[YR=2011] W9 S2 W12 S25 E28 N8 W7 N19$ PTR=E15
DCK=[YR=2011] E29 S14 BAS=[YR=2011] E19 S53 FOP=[YR=2011] S6 W12 STR=[YR=2011] S8 W9 N4 W6 N4 E15 $ W15 N8 E6 S2 E21$ W21 N2 W6 S8 W21 N44FSP=[YR=2011] N15 E21 S15 W21$ E21 N15 E8$ W29 N14$ W15$ PTR=E78 FSP=[YR=2011] E21 FUS=[YR=2011] E27 S49 W4 S4 W11 N4 W4 N20 W8 S31 W21 N52 E21 N8$ S8 W21 N8$ W78$.

EXTRA FEATURES

LN	OB/XF CODE	DESCRIPTION	BLD	CAP	L	W	UNITS	UT	Adj R	ADJ UNIT PRICE	ORIG COND	YEAR ON	YEAR ACTUAL	Q	% COND	OB/XF MKT VALUE	NOTES
1	0504	FP-ELECTRI	0	100	0	0	1.00	UT	2,000.00	2,000.00	100	2012	2012	3	95	1,900	
2	0855	CONC PAVER	0	100	0	0	966.00	SF	7.00	7.00	100	2012	2012	3	93	6,289	
3	1242	WD DECK A	0	100	8	4	32.00	SF	10.00	10.00	100	2012	2012	3	55	176	

LAND DESCRIPTION

TOTAL OB/XF 8,365

LN	USE CODE	CLS	LAND USE DESCRIPTION	CAP	RD	LOC ZONE	FRONT	DEPTH	TOT LND UTS	UNIT TYPE	DT	DPTH FACT	% COND	TOT ADJ	UNIT PRICE	ADJ UNIT PRICE	LAND VALUE	OTHER ADJUSTMENTS AND NOTES	YEAR	DENSITY	DECL	FRZ	YR	CONSRV
1	000100	C	SFR	100		RSF-1	0.00	0.00	1.00	LT		1.00	1.00	1.00	450,000.00	450,000.00	450,000							

REVIEW DATE 04/27/2020 BY DJA Total Acres: 0.00 Total Land Value: 450,000 Market: 0 Agricultural: 0 Common: 450,000 PRINTED 08/06/2024 BY SYS