LOT 91
IN OR 1624/1505 & OR 1624/1506
IN OR 1624/1507 & OR 1624/1508

ARNOLD DEVON D
325 KUWE TRAIL
HINESVILLE, GA 31313

2024

01-6N-29-1300-0091-0000

BUILDING CHARACTERISTICS

ELEMENT	CD	CONSTRUCTION
Exterior Wall	12	CEDAR 90
Exterior Wall	16	WD FR STUC 10
Roof Structur	06	MANSARD 100
Roof Cover	11	SLATE 100
Interior Wall	05	DRYWALL 100
Interior Floo	12	HARDWOOD 90
Interior Floo	11	CLAY TILE 10
Air Condition	03	CENTRAL 100
Heating Type	04	AIR DUCTED 100
Bedrooms		3 100
Bathrooms		3.5 100
Frame	02	WOOD FRAME 100
Stories	1.	1. 100
Units		0 100
BUD8 Adjustme	05	DIST 1A 100
Occupancy	00	NONE 100
Quality	04	Quality Level 04
DOR CODE	0100	SINGLE FAMILY
MAP NUM		MKT AREA 10
NEIGHBORHOOD/LOC	10001.00	

AREA TYPE	TOTAL GROSS AREA	PCT OF BASE	TOT ADJ AREA	SUBAREA MARKET VALUE
BAS	1,858	100	1,858	324,460
BAS	44	100	44	7,684
BAS	77	100	77	13,447
BAS	309	100	309	53,960
FCP	267	25	67	11,700
FOP	18	30	5	873
FOP	28	30	8	1,397
FST	44	55	24	4,191
UOP	172	20	34	5,937
UOP	480	20	96	16,765
TOTALS	3,297		2,522	440,412

MARKET ADJUSTMENTS

TYPE	MDL	EFF. AREA	TOT ADJ PTS	EFF. BASE RATE	REPL. COST NEW	AYB	EYB	ECON	FNCT		NORM	% COND
0500	01	2,522	131.5440	197.32	497,641	1979	2000	0	0	0	11.50	88.50

1 SFR CUST – 0% - 0 Heated Area: 2288 HX Base Yr

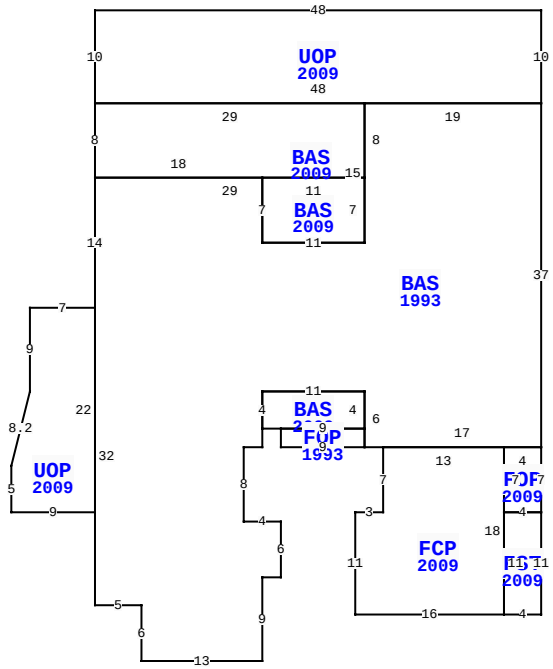

BLD DATE		LGL DATE	
XF DATE		LAND DATE	03/14/2024 MLU
INC DATE		AG DATE	

3 SPOTTED SANDPIPER RD, FERNANDINA BEACH

NASSAU COUNTY PROPERTY

PAGE 1 of 1 5

VALUATION SUMMARY

VALUATION BY	STANDARD
Tax Group: 5	Tax Dist:
BUILDING MARKET VALUE	440,412
TOTAL MARKET OB/XF VALUE	10,577
TOTAL LAND VALUE - MARKET	400,000
TOTAL MARKET VALUE	850,989
SOH/AGL Deduction	246,263
ASSESSED VALUE	604,726
TOTAL EXEMPTION VALUE	0
BASE TAXABLE VALUE	604,726
TOTAL JUST VALUE	850,989
NCON VALUE	0
INCOME VALUE	
PREVIOUS YEAR MKT VALUE	791,481

PERMIT NUM	DESCRIPTION	AMT	ISSUED
R11444	REPAIR/RRF	10,000	07/01/2008
P13387	OTHER	0	07/01/2008
B21483	ADDITION	250,000	05/01/2008

SALES DATA

OFF RECORD Number	DATE	TYPE INST	Q U	V I	RSN CD	SALE PRICE
1624/1508	6/05/2009	WD	U	I	16	44,857
GRANTOR: ARNOLD STEPHEN T						
GRANTEE: ARNOLD DEVON D						
1624/1507	6/05/2009	WD	U	I	16	44,857
GRANTOR: LIONE SUSAN B (ARNOLD						
GRANTEE: ARNOLD DEVON D						

BUILDING NOTES

BUILDING DIMENSIONS

UOP=[YR=2009] W48 S10 BAS=[YR=2009] S8 BAS=[YR=1993] S14 UOP=[YR=2009] W7 S9 L2 D8 S5 E9 N22$ S32 E5 S6 E13 N9 E2 N6 W4 N8 E2 N2 BAS=[YR=2009] E2 FOP=[YR=1993] S2 E9 N2 W9$ E9 N4 W11 S4$ N4 E11 S6 E2 FCP=[YR=2009] S7 W3 S11 E16 FST=[YR=2009] E4 N11 FOP=[YR=2009] N7 W4 S7 E4$ W4 S11$ N18 W13$ E17 N37 W19 S8 BAS=[YR=2009] S7 W11 N7 E11$ W29$ E18 S7 E11 N15 W29$ E48 N10$.

EXTRA FEATURES

LN	OB/XF CODE	DESCRIPTION	BLD	CAP	L	W	UNITS	UT	Adj R	ADJ UNIT PRICE	ORIG COND	YEAR ON	YEAR ACTUAL	Q	% COND	OB/XF MKT VALUE	NOTES
1	0504	FP-ELECTRI	0	0	0	0	1.00	UT	2,000.00	2,000.00	100	1980	1980	3	46.5	930	
2	0855	CONC PAVER	0	0	0	0	956.00	SF	10.00	10.00	100	2009	2009	3	90	8,604	
3	0810	CONCRETE A	0	0	0	0	129.00	SF	6.50	6.50	100	2009	2009	3	90	755	
4	1126	CB/STC 8"	0	0	20	2	40.00	SF	8.00	8.00	100	2009	2009	3	90	288	

LAND DESCRIPTION

TOTAL OB/XF 10,577

LN	USE CODE	CLS	LAND USE DESCRIPTION	CAP	RD	LOC ZONE	FRONT	DEPTH	TOT LND UTS	UNIT TYPE	DT	DPTH FACT	% COND	TOT ADJ	UNIT PRICE	ADJ UNIT PRICE	LAND VALUE	OTHER ADJUSTMENTS AND NOTES	YEAR	DENSITY	DECL	FRZ	YR	CONSRV
1	000100	C	SFR	0		RSF-1	0.00	0.00	1.00	LT		1.00	1.00	0.80	500,000.00	400,000.00	400,000							

REVIEW DATE 05/12/2019 BY KBA Total Acres: 0.00 Total Land Value: 400,000 Market: 0 Agricultural: 0 Common: 400,000 PRINTED 08/06/2024 BY SYS