LOT 85
MARSH CREEK VILLAGE 1 PB 4/18

SIMS SHANE & JANICE M
9 MARSH CREEK RD
FERNANDINA BEACH, FL 32034

2024

01-6N-29-1300-0085-0000

NASSAU COUNTY PROPERTY

BUILDING CHARACTERISTICS

ELEMENT	CD	CONSTRUCTION
Exterior Wall	16	WD FR STUC 100
Roof Structur	03	GABLE/HIP 100
Roof Cover	03	COMP SHNGL 100
Interior Wall	05	DRYWALL 100
Interior Floo	14	CARPET 60
Interior Floo	11	CLAY TILE 40
Air Condition	03	CENTRAL 100
Heating Type	04	AIR DUCTED 100
Bedrooms		4 100
Bathrooms		3 100
Frame	02	WOOD FRAME 100
Stories	1.	1. 100
Units		0 100
Quality	04	Quality Level 04
DOR CODE	0100	SINGLE FAMILY
MAP NUM		MKT AREA 10
NEIGHBORHOOD/LOC	10001.00	

AREA TYPE	TOTAL GROSS AREA	PCT OF BASE	TOT ADJ AREA	SUBAREA MARKET VALUE
BAS	2,694	100	2,694	511,706
BAS	443	100	443	84,144
DCC	352	15	53	10,067
FGR	781	55	430	81,675
FOP	16	30	5	950
FOP	120	30	36	6,838
FST	32	55	18	3,419
TOTALS	4,438		3,679	698,800

MARKET ADJUSTMENTS

TYPE	MDL	EFF. AREA	TOT ADJ PTS	EFF. BASE RATE	REPL. COST NEW	AYB	EYB	ECON	FNCT		NORM	% COND
0500	11	3,679	133.2936	199.94	735,579	1991	2013	0	0	0	5.00	95.00

1 SFR CUST – 100% - 2024 Heated Area: 3137 HX Base Yr 2024

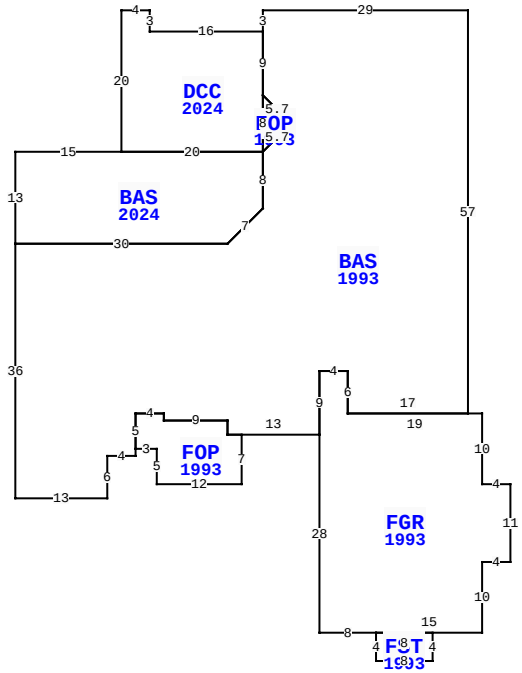

9 MARSH CREEK RD, FERNANDINA BEACH

BLD DATE		LGL DATE	
XF DATE		LAND DATE	03/14/2024 MLU
INC DATE		AG DATE	

VALUATION SUMMARY

VALUATION BY		STANDARD
Tax Group: 5	Tax Dist:	
BUILDING MARKET VALUE		698,800
TOTAL MARKET OB/XF VALUE		7,740
TOTAL LAND VALUE - MARKET		500,000
TOTAL MARKET VALUE		1,206,540
SOH/AGL Deduction		0
ASSESSED VALUE		1,206,540
TOTAL EXEMPTION VALUE	HX HB	50,000
BASE TAXABLE VALUE		1,156,540
TOTAL JUST VALUE		1,206,540
NCON VALUE		93,612
INCOME VALUE		
PREVIOUS YEAR MKT VALUE		1,039,174

PERMIT NUM	DESCRIPTION	AMT	ISSUED
230007398	RMDL KIT BTH	150,000	06/08/2023
R991915	REPAIR/RRF	10,000	08/01/1999
6381	NEW CONSTR	171,000	04/02/1990

SALES DATA

OFF RECORD Number	DATE	TYPE INST	Q / U	V / I	RSN CD	SALE PRICE
2612/1647	1/06/2023	WD	Q	I	02	1,350,000
GRANTOR: HALL GEORGE S SR & MA						
GRANTEE: SIMS SHANE & JANICE						
0659/1161	5/28/1992	WD	Q	I		335,000
GRANTOR: SATURDAY SUSAN G						
GRANTEE: HALL GEORGE SR & M						

BUILDING NOTES

BUILDING DIMENSIONS

BAS=[YR=1993;ORIG=0,0] W29 S3 S9 D4R4 D4L4 S8 D5L5 W30 S36 E13 N6 E4 N1 N5 E4 S1 E9 S2 E13 N9 E4 S6 E17 N57 $
FGR=[YR=1993;ORIG=-21,60] S28 E8 E15 N10 E4 N11 W4 N10 W19 N6 W4 S9 $
FOP=[YR=1993;ORIG=-47,62] E3 S5 E12 N7 W2 N2 W9 N1 W4 S5 $
FST=[YR=1993;ORIG=-13,88] S4 E8 N4 W8 $
FOP=[YR=1993;ORIG=-29,12] S8 U4R4 U4L4 $
BAS=[YR=2024;ORIG=-64,33] E30 U5R5 N8 W20 W15 S13 $
DCC=[YR=2024;ORIG=-49,20] E20 N8 N9 W16 N3 W4 S20 $
.

EXTRA FEATURES

LN	OB/XF CODE	DESCRIPTION	BLD	CAP	L	W	UNITS	UT	Adj R	ADJ UNIT PRICE	ORIG COND	YEAR ON	YEAR ACTUAL	Q	% COND	OB/XF MKT VALUE	NOTES
1	0504	FP-ELECTRI	0	100	0	0	1.00	UT	2,000.00	2,000.00	100	1991	1991	3	70	1,400	
2	0812	CONCRETE C	0	100	0	0	1,850.00	SF	4.00	4.00	100	1991	1991	3	62	4,588	
3	0825	BRICK	0	100	11	3	33.00	SF	12.50	12.50	100	1991	1991	3	87	359	
4	1242	WD DECK A	0	100	0	0	310.00	SF	10.00	10.00	100	1991	1991	3	20	620	
5	1125	CB/STC 6"	0	100	15	6	90.00	SF	7.35	7.35	100	1991	1991	3	62	410	
6	1124	CB/STC 4"	0	100	18	5	90.00	SF	6.50	6.50	100	1991	1991	3	62	363	

LAND DESCRIPTION

TOTAL OB/XF 7,740

LN	USE CODE	CLS	LAND USE DESCRIPTION	CAP	RD	LOC ZONE	FRONT	DEPTH	TOT LND UTS	UNIT TYPE	DT	DPTH FACT	% COND	TOT ADJ	UNIT PRICE	ADJ UNIT PRICE	LAND VALUE	OTHER ADJUSTMENTS AND NOTES	YEAR	DENSITY	DECL	FRZ	YR	CONSRV
1	000100	C	SFR	100		RSF-1	0.00	0.00	1.00	LT		1.00	1.00	1.00	500,000.00	500,000.00	500,000							

REVIEW DATE 02/21/2024 BY TW Total Acres: 0.00 Total Land Value: 500,000 Market: 0 Agricultural: 0 Common: 500,000 PRINTED 08/06/2024 BY SYS