LOT 72
MARSH CREEK VILLAGE 1 PB 4/18

DUPREE THOMAS E JR
16 BELTED KINGFISHER ROAD
FERNANDINA BEACH, FL 32034

2024

01-6N-29-1300-0072-0000

BUILDING CHARACTERISTICS

ELEMENT	CD	CONSTRUCTION
Exterior Wall	12	CEDAR 50
Exterior Wall	16	WD FR STUC 50
Roof Structur	03	GABLE/HIP 100
Roof Cover	10	WD SHINGLE 100
Interior Wall	05	DRYWALL 50
Interior Wall	08	DECORATIVE 50
Interior Floo	14	CARPET 50
Interior Floo	15	HARDTILE 50
Air Condition	03	CENTRAL 100
Heating Type	04	AIR DUCTED 100
Bedrooms		3 100
Bathrooms		3 100
Frame	02	WOOD FRAME 100
Stories	2.	2. 100
Units		0 100
BUD8 Adjustme	05	DIST 1A 100
Occupancy	00	NONE 100
Quality	05	Quality Level 05
DOR CODE	0100	SINGLE FAMILY
MAP NUM		MKT AREA 10
NEIGHBORHOOD/LOC	10001.00	

AREA TYPE	TOTAL GROSS AREA	PCT OF BASE	TOT ADJ AREA	SUBAREA MARKET VALUE
BAS	1,398	100	1,398	222,884
FDG	360	60	216	34,437
FEP	40	80	32	5,102
FOP	36	30	11	1,754
FUS	744	100	744	118,616
PTO	144	5	7	1,116
PTO	330	5	16	2,551
UOP	90	20	18	2,870
UOP	590	20	118	18,813
TOTALS	3,732		2,560	408,141

MARKET ADJUSTMENTS

TYPE	MDL	EFF. AREA	TOT ADJ PTS	EFF. BASE RATE	REPL. COST NEW	AYB	EYB	ECON	FNCT		NORM	% COND
0500	01	2,560	130.4160	195.62	500,787	1986	1986	0	0	0	18.50	81.50

1 SFR CUST – 0% - 0 Heated Area: 2142 HX Base Yr

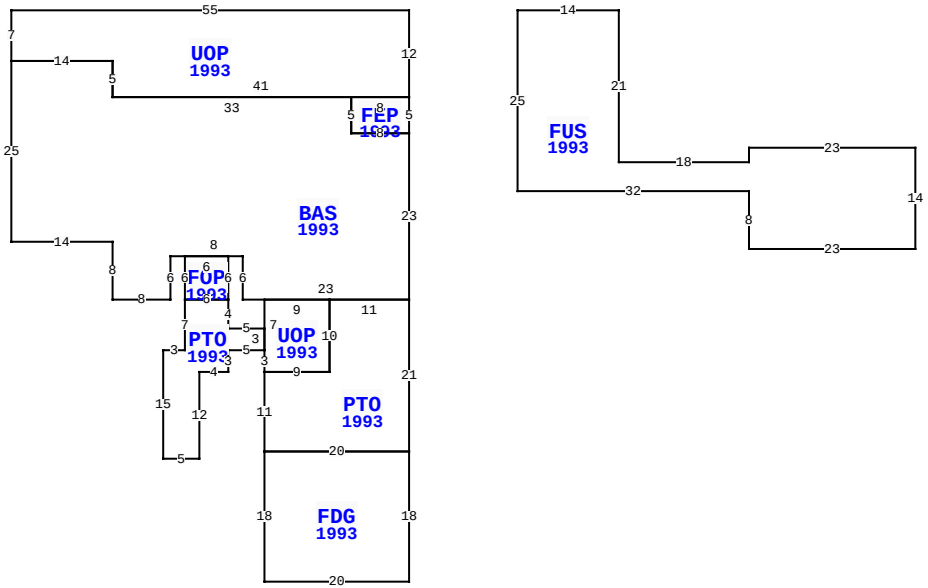

16 BELTED KINGFISHER, FERNANDINA BEACH

BLD DATE		LGL DATE	
XF DATE		LAND DATE	03/14/2024 MLU
INC DATE		AG DATE	

NASSAU COUNTY PROPERTY

PAGE 1 of 1 5

VALUATION SUMMARY

VALUATION BY	STANDARD
Tax Group: 5	Tax Dist:
BUILDING MARKET VALUE	408,141
TOTAL MARKET OB/XF VALUE	9,075
TOTAL LAND VALUE - MARKET	500,000
TOTAL MARKET VALUE	917,216
SOH/AGL Deduction	253,399
ASSESSED VALUE	663,817
TOTAL EXEMPTION VALUE	0
BASE TAXABLE VALUE	663,817
TOTAL JUST VALUE	917,216
NCON VALUE	0
INCOME VALUE	
PREVIOUS YEAR MKT VALUE	849,370

PERMIT NUM	DESCRIPTION	AMT	ISSUED
B018609	XFOB	5,893	07/01/2001

SALES DATA

OFF RECORD Number	DATE	TYPE INST	Q / U	V / I	RSN CD	SALE PRICE
2273/1935	5/09/2019	WD	Q	I	02	545,000
GRANTOR: TRST UNDER LAST WILL						
GRANTEE: DUPREE THOMAS E JR						
1472/0792	1/18/2007	PR	U	I	01	100
GRANTOR: WEISS ETHAN G P/R						
GRANTEE: WEISS ETHAN G						

BUILDING NOTES

BUILDING DIMENSIONS

UOP=[YR=1993] W55 S7 BAS=[YR=1993] S25 E14 S8 E8N6 E2 FOP=[YR=1993] S6 PTO=[YR=1993] S7 W3 S15E5N12 E4 N3 E5 UOP=[YR=1993] S3 E9 N10 W9S7 $ N3 W5 N4 W6 $ E6 N6 W6 $ E8 S6 E23 PTO=[YR=1993] S21 FDG=[YR=1993] S18 W20 N18 E20 $ W20 N11 E9 N10 E11 $ N23 FEP=[YR=1993] N5 W8 S5 E8 $ W8 N5 W33 N5 W14 $ E14 S5 E41 N12 $ PTR= E15 FUS=[YR=1993] E14 S21 E18 N2 E23 S14 W23 N8 W32 N25 $ W15 $.

EXTRA FEATURES

LN	OB/XF CODE	DESCRIPTION	BLD	CAP	L	W	UNITS	UT	Adj R	ADJ UNIT PRICE	ORIG COND	YEAR ON	YEAR ACTUAL	Q	% COND	OB/XF MKT VALUE	NOTES
1	1125	CB/STC 6"	0	0	0	0	103.00	SF	7.35	7.35	100	1986	1986	3	49.5	375	
2	0812	CONCRETE C	0	0	0	0	1,212.00	SF	4.00	4.00	100	1986	1986	3	49.5	2,400	
3	0861	POOL GUNIT	0	0	15	20	300.00	SF	85.00	85.00	100	1986	1986	3	20	5,100	
4	0504	FP-ELECTRI	0	0	0	0	1.00	UT	2,000.00	2,000.00	100	1986	1986	3	60	1,200	

LAND DESCRIPTION

TOTAL OB/XF 9,075

LN	USE CODE	CLS	LAND USE DESCRIPTION	CAP	RD	LOC ZONE	FRONT	DEPTH	TOT LND UTS	UNIT TYPE	DT	DPTH FACT	% COND	TOT ADJ	UNIT PRICE	ADJ UNIT PRICE	LAND VALUE	OTHER ADJUSTMENTS AND NOTES	YEAR	DENSITY	DECL	FRZ	YR	CONSRV
1	000100	C	SFR	0		RSF-1	0.00	0.00	1.00	LT		1.00	1.00	1.00	500,000.00	500,000.00	500,000							

REVIEW DATE 05/12/2019 BY KBA Total Acres: 0.00 Total Land Value: 500,000 Market: 0 Agricultural: 0 Common: 500,000 PRINTED 08/06/2024 BY SYS