LOT 62
IN OR 1743/1176
MARSH CREEK VILLAGE 1 PB 4/18

MUIR JANE E
113 MARSH CREEK RD
FERNANDINA BEACH, FL 32034

2024

01-6N-29-1300-0062-0000

BUILDING CHARACTERISTICS

ELEMENT	CD	CONSTRUCTION
Exterior Wall	16	WD FR STUC 90
Exterior Wall	12	CEDAR 10
Roof Structur	03	GABLE/HIP 100
Roof Cover	03	COMP SHNGL 100
Interior Wall	05	DRYWALL 100
Interior Floo	14	CARPET 80
Interior Floo	12	HARDWOOD 20
Air Condition	03	CENTRAL 100
Heating Type	04	AIR DUCTED 100
Bedrooms		4 100
Bathrooms		4.5 100
Frame	02	WOOD FRAME 100
Stories	1.	1. 100
Units		0 100
Occupancy	00	NONE 100
Quality	04	Quality Level 04
DOR CODE	0100	SINGLE FAMILY
MAP NUM		MKT AREA 10
NEIGHBORHOOD/LOC	10001.00	

AREA TYPE	TOTAL GROSS AREA	PCT OF BASE	TOT ADJ AREA	SUBAREA MARKET VALUE
BAS	2,697	100	2,697	351,553
BAS	65	100	65	8,473
FGR	545	55	300	39,105
FGR	294	55	162	21,117
FOP	120	30	36	4,692
FSP	140	40	56	7,300
FST	15	55	8	1,043
FUS	796	100	796	103,758
UOP	358	20	72	9,385
TOTALS	5,030		4,192	546,426

MARKET ADJUSTMENTS

TYPE	MDL	EFF. AREA	TOT ADJ PTS	EFF. BASE RATE	REPL. COST NEW	AYB	EYB	ECON	FNCT		NORM	% COND
0500	01	4,192	102.8412	154.26	646,658	1992	1992	0	0	0	15.50	84.50

1 SFR CUST – 100% - 2012 Heated Area: 3558 HX Base Yr 2012

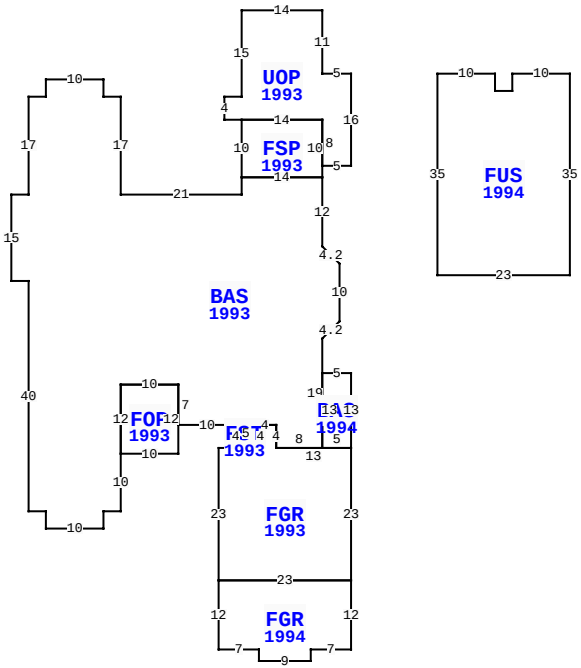

113 MARSH CREEK RD, FERNANDINA BEACH

BLD DATE		LGL DATE	
XF DATE		LAND DATE	05/07/2024 MLU
INC DATE		AG DATE	

NASSAU COUNTY PROPERTY

PAGE 1 of 2 5

VALUATION SUMMARY

VALUATION BY		STANDARD
Tax Group: 5	Tax Dist:	
BUILDING MARKET VALUE		546,426
TOTAL MARKET OB/XF VALUE		16,918
TOTAL LAND VALUE - MARKET		585,000
TOTAL MARKET VALUE		1,148,344
SOH/AGL Deduction		692,947
ASSESSED VALUE		455,397
TOTAL EXEMPTION VALUE	HX HB WX	55,000
BASE TAXABLE VALUE		400,397
TOTAL JUST VALUE		1,148,344
NCON VALUE		0
INCOME VALUE		
PREVIOUS YEAR MKT VALUE		1,079,590

PERMIT NUM	DESCRIPTION	AMT	ISSUED
B01039	GARAGE	35,100	05/01/1995
7673	NEW CONSTR	206,000	11/08/1991

SALES DATA

OFF RECORD Number	DATE	TYPE INST	Q / U	V / I	RSN CD	SALE PRICE
1743/1176	6/10/2011	PR	Q	I	02	658,200
GRANTOR: CRYMES THERSA DALTON						
GRANTEE: MUIR JOHN D & JANE						
0770/1896	9/13/1996	WD	U	I	01	100
GRANTOR: STUART MIRIAM P						
GRANTEE: STUART EDWARD P & M						

BUILDING NOTES

BUILDING DIMENSIONS

UOP=[YR=1993] W5 N11W14 S15 W3 S4 E3 FSP=[YR=1993] S10 BAS=[YR=1993] S3 W21 N17 W3 N3 W10 S3 W3 S17 W3 S15 E3 S40 E3S3 E10 N3 E3 N10 FOP=[YR=1993] E10 N12 W10 S12 $ N12 E10 S7 E10 FST=[YR=1993] S4 FGR=[YR=1993] W3 S23 FGR=[YR=1994] S12 E7 S2 E9 N2 E7 N12W23 $ E23 N23 BAS=[YR=1994] N13 W5 S13 E5 $ W13 N4 W4 S4 W3 $ E3 N5 W3 S1 $ N1 E3 S1 E4 S4 E8 N19 R3 U3 N10 L3 U3 N12 W14 $ E14 N10 W14 $ E14 S8 E5 N16 $ PTR=E15 FUS=[YR=1994] E10 S3 E3 N3 E10 S35 W23 N35 $ W15 $.

EXTRA FEATURES

LN	OB/XF CODE	DESCRIPTION	BLD	CAP	L	W	UNITS	UT	Adj R	ADJ UNIT PRICE	ORIG COND	YEAR ON	YEAR ACTUAL	Q	% COND	OB/XF MKT VALUE	NOTES
1	0504	FP-ELECTRI	0	100	0	0	1.00	UT	2,000.00	2,000.00	100	1992	1992	3	72	1,440	
2	0812	CONCRETE C	0	100	0	0	1,494.00	SF	4.00	4.00	100	1992	1992	3	64	3,825	
3	0825	BRICK	0	100	0	0	39.00	SF	12.50	12.50	100	1992	1992	3	88	429	
4	1123	CB 8"	0	100	18	6	108.00	SF	6.15	6.15	100	1992	1992	3	64	425	
5	0810	CONCRETE A	0	100	11	9	99.00	SF	6.50	6.50	100	1992	1992	3	64	412	
6	0812	CONCRETE C	0	100	0	0	1,717.00	SF	4.00	4.00	100	1994	1994	3	68	4,670	
7	0810	CONCRETE A	0	100	38	3	114.00	SF	6.50	6.50	100	1994	1994	3	68	504	
8	0825	BRICK	0	100	0	0	7.00	SF	12.50	12.50	100	1994	1994	3	90	79	
9	0810	CONCRETE A	0	100	15	3	45.00	SF	6.50	6.50	100	1992	1992	3	64	187	
10	0810	CONCRETE A	0	100	0	0	91.00	SF	6.50	6.50	100	1992	1992	3	64	379	

TOTAL OB/XF 12,350

LAND DESCRIPTION

LN	USE CODE	CLS	LAND USE DESCRIPTION	CAP	RD	LOC ZONE	FRONT	DEPTH	TOT LND UTS	UNIT TYPE	DT	DPTH FACT	% COND	TOT ADJ	UNIT PRICE	ADJ UNIT PRICE	LAND VALUE	OTHER ADJUSTMENTS AND NOTES	YEAR	DENSITY	DECL	FRZ	YR	CONSRV
1	000140	C	SFR GOLF A	100		RSF-1	0.00	0.00	1.00	LT		1.00	1.00	0.90	650,000.00	585,000.00	585,000							

REVIEW DATE 04/27/2020 BY DJA Total Acres: 0.00 Total Land Value: 585,000 Market: 0 Agricultural: 0 Common: 585,000 PRINTED 08/06/2024 BY SYS

LOT 62
IN OR 1743/1176
MARSH CREEK VILLAGE 1 PB 4/18

MUIR JANE E
113 MARSH CREEK RD
FERNANDINA BEACH, FL 32034

2024

01-6N-29-1300-0062-0000

NASSAU COUNTY PROPERTY

BUILDING CHARACTERISTICS

ELEMENT	CD	CONSTRUCTION

DOR CODE	0100	SINGLE FAMILY	
MAP NUM		MKT AREA	10
NEIGHBORHOOD/LOC	10001.00		

AREA TYPE	TOTAL GROSS AREA	PCT OF BASE	TOT ADJ AREA	SUBAREA MARKET VALUE
TOTALS				

MARKET ADJUSTMENTS

TYPE	MDL	EFF. AREA	TOT ADJ PTS	EFF. BASE RATE	REPL. COST NEW	AYB	EYB	ECON	FNCT		NORM	% COND

VALUATION SUMMARY

VALUATION BY		STANDARD
Tax Group: 5	Tax Dist:	
BUILDING MARKET VALUE		546,426
TOTAL MARKET OB/XF VALUE		16,918
TOTAL LAND VALUE - MARKET		585,000
TOTAL MARKET VALUE		1,148,344
SOH/AGL Deduction		692,947
ASSESSED VALUE		455,397
TOTAL EXEMPTION VALUE	HX HB WX	55,000
BASE TAXABLE VALUE		400,397
TOTAL JUST VALUE		1,148,344
NCON VALUE		0
INCOME VALUE		
PREVIOUS YEAR MKT VALUE		1,079,590

PERMIT NUM	DESCRIPTION	AMT	ISSUED

SALES DATA

OFF RECORD Number	DATE	TYPE INST	Q / U	V / I	RSN CD	SALE PRICE
1743/1176	6/10/2011	PR	Q	I	02	658,200
GRANTOR: CRYMES THERSA DALTON						
GRANTEE: MUIR JOHN D & JANE						
0770/1896	9/13/1996	WD	U	I	01	100
GRANTOR: STUART MIRIAM P						
GRANTEE: STUART EDWARD P & M						

BLD DATE		LGL DATE	
XF DATE		LAND DATE	05/07/2024 MLU
INC DATE		AG DATE	

BUILDING NOTES

BUILDING DIMENSIONS

EXTRA FEATURES

LN	OB/XF CODE	DESCRIPTION	BLD	CAP	L	W	UNITS	UT	Adj R	ADJ UNIT PRICE	ORIG COND	YEAR ON	YEAR ACTUAL	Q	% COND	OB/XF MKT VALUE	NOTES
11	0462	ST/AL FNC	0	100	0	0	330.00	SF	10.00	10.00	100	2012	2012	3	68	2,244	
12	0855	CONC PAVER	0	100	0	0	357.00	SF	7.00	7.00	100	2012	2012	3	93	2,324	

LAND DESCRIPTION

TOTAL OB/XF 4,568

LN	USE CODE	CLS	LAND USE DESCRIPTION	CAP	RD	LOC ZONE	FRONT	DEPTH	TOT LND UTS	UNIT TYPE	DT	DPTH FACT	% COND	TOT ADJ	UNIT PRICE	ADJ UNIT PRICE	LAND VALUE	OTHER ADJUSTMENTS AND NOTES	YEAR	DENSITY	DECL	FRZ	YR	CONSRV

REVIEW DATE 04/27/2020 BY DJA Total Acres: 0.00 Total Land Value: 585,000 Market: 0 Agricultural: 0 Common: 585,000 PRINTED 08/06/2024 BY SYS