LOT 7
MARSH CREEK VILLAGE 1 PB 4/18

**PARKER LARRY JOHNSON/PICOU JENNIFER THERESA**
4 PAINTED BUNTING
FERNANDINA BEACH, FL 32034

**2024**

**01-6N-29-1300-0007-0000**

## NASSAU COUNTY PROPERTY



## BUILDING CHARACTERISTICS

| ELEMENT | CD | CONSTRUCTION |
|---|---|---|
| Exterior Wall | 12 | CEDAR 100 |
| Roof Structur | 03 | GABLE/HIP 100 |
| Roof Cover | 03 | COMP SHNGL 100 |
| Interior Wall | 05 | DRYWALL 80 |
| Interior Wall | 06 | CUST PANEL 20 |
| Interior Floo | 14 | CARPET 70 |
| Interior Floo | 12 | HARDWOOD 30 |
| Air Condition | 03 | CENTRAL 100 |
| Heating Type | 04 | AIR DUCTED 100 |
| Bedrooms | | 3 100 |
| Bathrooms | | 4 100 |
| Frame | 02 | WOOD FRAME 100 |
| Stories | 2. | 2. 100 |
| Units | | 0 100 |
| BUD8 Adjustme | 05 | DIST 1A 100 |
| Occupancy | 00 | NONE 100 |
| Quality | 04 | Quality Level 04 |
| DOR CODE | 0100 | SINGLE FAMILY |
| MAP NUM | | MKT AREA 10 |
| NEIGHBORHOOD/LOC | 10001.00 | |

| AREA TYPE | TOTAL GROSS AREA | PCT OF BASE | TOT ADJ AREA | SUBAREA MARKET VALUE |
|---|---|---|---|---|
| BAS | 1,977 | 100 | 1,977 | 261,628 |
| BAS | 144 | 100 | 144 | 19,056 |
| FGR | 624 | 55 | 343 | 45,391 |
| FOP | 40 | 30 | 12 | 1,588 |
| FOP | 154 | 30 | 46 | 6,087 |
| FOP | 98 | 30 | 29 | 3,838 |
| FSP | 300 | 40 | 120 | 15,880 |
| FUS | 616 | 100 | 616 | 81,519 |
| SFB | 208 | 80 | 166 | 21,968 |
| UOP | 156 | 20 | 31 | 4,102 |
| TOTALS | 4,759 | | 3,572 | 472,704 |

## MARKET ADJUSTMENTS

| TYPE | MDL | EFF. AREA | TOT ADJ PTS | EFF. BASE RATE | REPL. COST NEW | AYB | EYB | ECON | FNCT | | NORM | % COND |
|---|---|---|---|---|---|---|---|---|---|---|---|---|
| 0500 | 01 | 3,572 | 110.2815 | 165.42 | 590,880 | 1983 | 1983 | 0 | 0 | 0 | 20.00 | 80.00 |

1 SFR CUST – 100% - 2024 Heated Area: 2903 HX Base Yr 2024

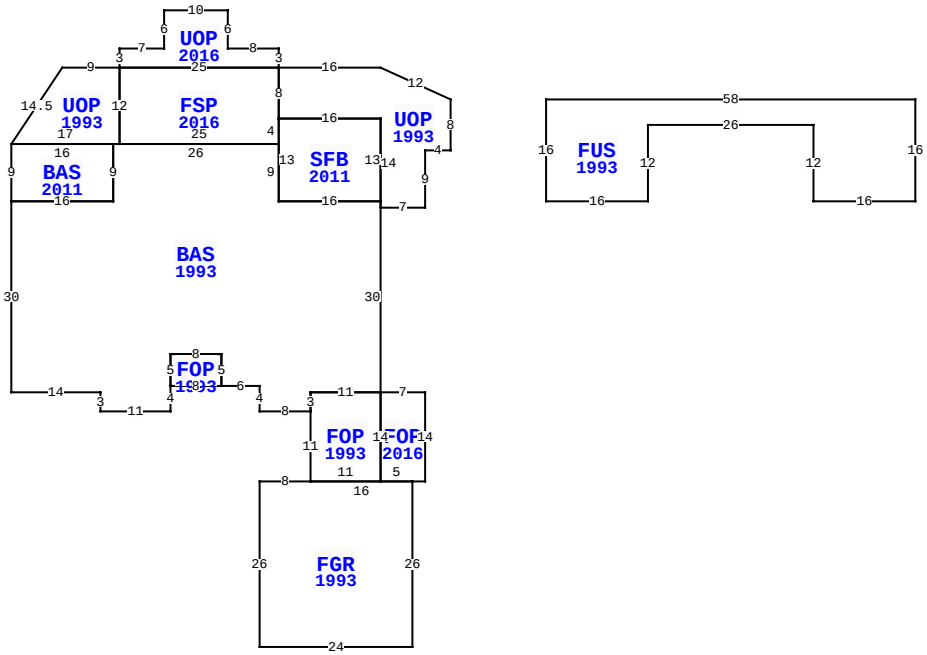


** This building has 12 Sub-Areas

4 PAINTED BUNTING, FERNANDINA BEACH

| | | | |
|---|---|---|---|
| BLD DATE | | LGL DATE | |
| XF DATE | | LAND DATE | 05/07/2024 MLU |
| INC DATE | | AG DATE | |

## VALUATION SUMMARY

| | | |
|---|---|---|
| VALUATION BY | | STANDARD |
| Tax Group: 5 | Tax Dist: | |
| BUILDING MARKET VALUE | | 472,704 |
| TOTAL MARKET OB/XF VALUE | | 9,021 |
| TOTAL LAND VALUE - MARKET | | 650,000 |
| TOTAL MARKET VALUE | | 1,131,725 |
| SOH/AGL Deduction | | 0 |
| ASSESSED VALUE | | 1,131,725 |
| TOTAL EXEMPTION VALUE | HX HB | 50,000 |
| BASE TAXABLE VALUE | | 1,081,725 |
| TOTAL JUST VALUE | | 1,131,725 |
| NCON VALUE | | 0 |
| INCOME VALUE | | |
| PREVIOUS YEAR MKT VALUE | | 1,061,295 |

| PERMIT NUM | DESCRIPTION | AMT | ISSUED |
|---|---|---|---|
| B1531307 | NEW CONSTR | 0 | 10/21/2015 |
| R013750 | REPAIR/RRF | 2,000 | 12/01/2001 |
| 0231 | ADDITION | 14,600 | 06/01/1993 |

## SALES DATA

| OFF RECORD Number | DATE | TYPE INST | Q / U | V / I | RSN CD | SALE PRICE |
|---|---|---|---|---|---|---|
| 2681/182 | 11/17/2023 | WD | Q | I | 01 | 1,320,000 |
| GRANTOR: COBB NORMAN D & CYNTH | | | | | | |
| GRANTEE: PARKER LARRY JOHNSO | | | | | | |
| 1961/1944 | 2/06/2015 | WD | Q | I | 01 | 625,000 |
| GRANTOR: GARTH RICHARD E REVOC | | | | | | |
| GRANTEE: COBB NORMAN D & CYN | | | | | | |

## BUILDING NOTES

## BUILDING DIMENSIONS

UOP=[YR=1993] U5 L11 W16 UOP=[YR=2016] N3 W8 N6 W10 S6 W7 S3 UOP=[YR=1993] W9 L8 D12 BAS=[YR=2011] S9 BAS=[YR=1993] S30 E14 S3 E11 N4 FOP=[YR=1993] E8 N5 W8 S5 $ N5 E8 S5 E6 S4 E8 FOP=[YR=1993] S11 FGR=[YR=1993] W8 S26 E24 N26 FOP=[YR=2016] E2 N14 W7 S14 E5$ W16$ E11 N14 W11 S3 $ N3 E11 N30 SFB=[YR=2011] N13 W16 FSP=[YR=2016] N8 W25 S12 E25 N4$ S13 E16$ W16 N9 W26 S9 W16 $ E16 N9 W16$ E17 N12$ E25$ S8 E16 S14 E7 N9 E4 N8$ PTR= E15 FUS=[YR=1993] E58 S16 W16 N12 W26 S12 W16 N16$ W15 $.

## EXTRA FEATURES

| LN | OB/XF CODE | DESCRIPTION | BLD | CAP | L | W | UNITS | UT | Adj R | ADJ UNIT PRICE | ORIG COND | YEAR ON | YEAR ACTUAL | Q | % COND | OB/XF MKT VALUE | NOTES |
|---|---|---|---|---|---|---|---|---|---|---|---|---|---|---|---|---|---|
| 1 | 0850 | PEBBLE WLK | 0 | 100 | 0 | 0 | 2,170.00 | SF | 3.50 | 3.50 | 100 | 1983 | 1983 | 3 | 41 | 3,114 | |
| 2 | 0504 | FP-ELECTRI | 0 | 100 | 0 | 0 | 1.00 | UT | 2,000.00 | 2,000.00 | 100 | 1983 | 1983 | 3 | 54 | 1,080 | |
| 3 | 1242 | WD DECK A | 0 | 100 | 15 | 7 | 105.00 | SF | 10.00 | 10.00 | 100 | 1983 | 1983 | 3 | 20 | 210 | |
| 4 | 1126 | CB/STC 8" | 0 | 100 | 0 | 0 | 384.00 | SF | 8.00 | 8.00 | 100 | 1983 | 1983 | 3 | 41 | 1,260 | |
| 5 | 0445 | BOX FNC 5' | 0 | 100 | 0 | 0 | 10.00 | LF | 8.10 | 8.10 | 100 | 1983 | 1983 | 3 | 20 | 16 | |
| 6 | 0855 | CONC PAVER | 0 | 100 | 0 | 0 | 348.00 | SF | 10.00 | 10.00 | 100 | 2016 | 2016 | 3 | 96 | 3,341 | |

## LAND DESCRIPTION

TOTAL OB/XF 9,021

| LN | USE CODE | CLS | LAND USE DESCRIPTION | CAP | RD | LOC ZONE | FRONT | DEPTH | TOT LND UTS | UNIT TYPE | DT | DPTH FACT | % COND | TOT ADJ | UNIT PRICE | ADJ UNIT PRICE | LAND VALUE | OTHER ADJUSTMENTS AND NOTES | YEAR | DENSITY | DECL | FRZ | YR | CONSRV |
|---|---|---|---|---|---|---|---|---|---|---|---|---|---|---|---|---|---|---|---|---|---|---|---|---|
| 1 | 000140 | C | SFR GOLF A | 100 | | RSF-1 | 0.00 | 0.00 | 1.00 | LT | | 1.00 | 1.00 | 1.00 | 650,000.00 | 650,000.00 | 650,000 | | | | | | | |

REVIEW DATE 05/12/2019 BY KBA Total Acres: 0.00 Total Land Value: 650,000 Market: 0 Agricultural: 0 Common: 650,000 PRINTED 08/06/2024 BY SYS