LOT 6
IN OR 1018/1809-1812
MARSH CREEK VILLAGE 1 PB 4/18

HIGGINBOTHAM WILLIAM T LIVING TRUST/HIGGINBOTHAM D
2 PAINTED BUNTING RD
FERNANDINA BEACH, FL 32034

2024

01-6N-29-1300-0006-0000

NASSAU COUNTY PROPERTY

BUILDING CHARACTERISTICS

ELEMENT	CD	CONSTRUCTION
Exterior Wall	16	WD FR STUC 100
Roof Structur	03	GABLE/HIP 100
Roof Cover	03	COMP SHNGL 100
Interior Wall	05	DRYWALL 100
Interior Floo	14	CARPET 80
Interior Floo	12	HARDWOOD 20
Air Condition	03	CENTRAL 100
Heating Type	04	AIR DUCTED 100
Bedrooms		3 100
Bathrooms		3.5 100
Frame	02	WOOD FRAME 100
Stories	1.	1. 100
Units		0 100
Occupancy	00	NONE 100
Quality	04	Quality Level 04

DOR CODE	0100	SINGLE FAMILY	
MAP NUM		MKT AREA	10
NEIGHBORHOOD/LOC	10001.00		

AREA TYPE	TOTAL GROSS AREA	PCT OF BASE	TOT ADJ AREA	SUBAREA MARKET VALUE
BAS	2,878	100	2,878	365,214
FGR	852	55	469	59,516
FOP	27	30	8	1,016
FOP	264	30	79	10,025
FUS	483	100	483	61,292
UOP	60	20	12	1,523
UOP	282	20	56	7,106
UOP	1,074	20	215	27,283
TOTALS	5,920		4,200	532,975

MARKET ADJUSTMENTS

TYPE	MDL	EFF. AREA	TOT ADJ PTS	EFF. BASE RATE	REPL. COST NEW	AYB	EYB	ECON	FNCT		NORM	% COND
0500	01	4,200	100.7160	151.07	634,494	1991	1991	0	0	0	16.00	84.00

1 SFR CUST – 100% - 0 Heated Area: 3361 HX Base Yr

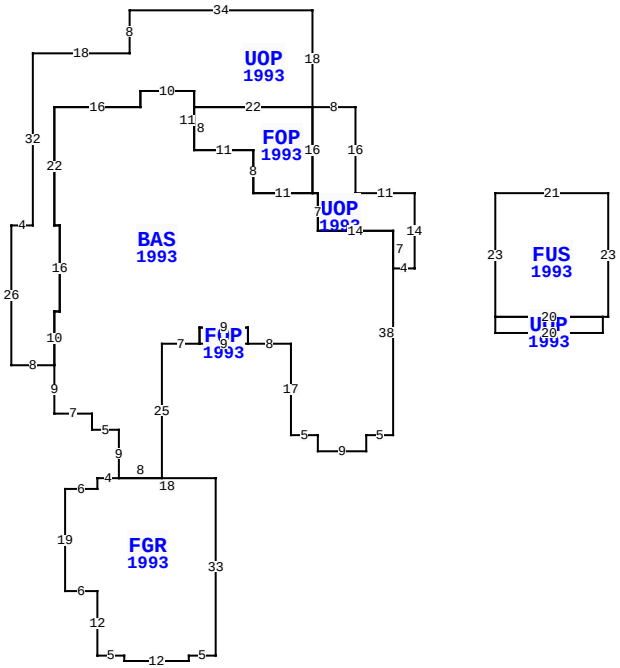

BLD DATE		LGL DATE	
XF DATE		LAND DATE	05/07/2024 MLU
INC DATE		AG DATE	

2 PAINTED BUNTING, FERNANDINA BEACH

VALUATION SUMMARY

VALUATION BY		STANDARD
Tax Group: 5	Tax Dist:	
BUILDING MARKET VALUE		532,975
TOTAL MARKET OB/XF VALUE		8,436
TOTAL LAND VALUE - MARKET		650,000
TOTAL MARKET VALUE		1,191,411
SOH/AGL Deduction		652,394
ASSESSED VALUE		539,017
TOTAL EXEMPTION VALUE	HX HB	50,000
BASE TAXABLE VALUE		489,017
TOTAL JUST VALUE		1,191,411
NCON VALUE		0
INCOME VALUE		
PREVIOUS YEAR MKT VALUE		1,117,994

PERMIT NUM	DESCRIPTION	AMT	ISSUED
6379	NEW CONSTR	294,080	03/29/1990

SALES DATA

OFF RECORD Number	DATE	TYPE INST	Q / U	V / I	RSN CD	SALE PRICE
1018/1811	11/08/2001	WD	U	I	01	100
GRANTOR: HIGGINBOTHAM DOLOES &						
GRANTEE: HIGGINBOTHAM DOLORE						
1018/1809	11/08/2001	WD	U	I	01	100
GRANTOR: HIGGINBOTHAM WILLIAM						
GRANTEE: HIGGINBOTHAM WILLIA						

BUILDING NOTES

BUILDING DIMENSIONS

UOP=[YR=1993] W11 N16 W8 UOP=[YR=1993] N18 W34 S8 W18 S32 W4 S26 E8 BAS=[YR=1993] S9 E7 S3 E5 S9 FGR=[YR=1993] W4 S2 W6 S19 E6 S12 E5 S1 E12 N1 E5 N33 W18 $ E8 N25 E7 FOP=[YR=1993] E9 N3 W9 S3 $ N3 E9 S3 E8 S17 E5 S3 E9 N3 E5 N38 W14 N7 W1 FOP=[YR=1993] N16 W22 S8 E11 S8 E11 $ W11 N8 W11 N11 W10 S3 W16 S22 E1 S16 W1 S10 $ N10 E1 N16 W1 N22 E16 N3 E10 S3 E22 $ S16 E1 S7 E14 S7 E4 N14 $ PTR= E15 FUS=[YR=1993] E21 S23 W1 UOP=[YR=1993] S3 W20 N3 E20 $ W20 N23 $ W15 $.

EXTRA FEATURES

LN	OB/XF CODE	DESCRIPTION	BLD	CAP	L	W	UNITS	UT	Adj R	ADJ UNIT PRICE	ORIG COND	YEAR ON	YEAR ACTUAL	Q	% COND	OB/XF MKT VALUE	NOTES
1	0504	FP-ELECTRI	0	100	0	0	1.00	UT	2,000.00	2,000.00	100	1991	1991	3	70	1,400	
2	0812	CONCRETE C	0	100	0	0	1,674.00	SF	4.00	4.00	100	1991	1991	3	62	4,152	
3	0858	SCULP CONC	0	100	0	0	255.00	SF	13.00	13.00	100	1991	1991	3	87	2,884	

LAND DESCRIPTION

TOTAL OB/XF 8,436

LN	USE CODE	CLS	LAND USE DESCRIPTION	CAP	RD	LOC ZONE	FRONT	DEPTH	TOT LND UTS	UNIT TYPE	DT	DPTH FACT	% COND	TOT ADJ	UNIT PRICE	ADJ UNIT PRICE	LAND VALUE	OTHER ADJUSTMENTS AND NOTES	YEAR	DENSITY	DECL	FRZ	YR	CONSRV
1	000140	C	SFR GOLF A	100		RSF-1	0.00	0.00	1.00	LT		1.00	1.00	1.00	650,000.00	650,000.00	650,000							

REVIEW DATE 05/12/2019 BY KBA Total Acres: 0.00 Total Land Value: 650,000 Market: 0 Agricultural: 0 Common: 650,000 PRINTED 08/06/2024 BY SYS