LOT 5
MARSH CREEK VILLAGE 1 PB 4/18

ALEMAN ROGER & BEVERLY
12225 RANCH ROAD
ARGYLE, TX 76226

2024

01-6N-29-1300-0005-0000

NASSAU COUNTY PROPERTY

BUILDING CHARACTERISTICS

ELEMENT	CD	CONSTRUCTION
Exterior Wall	16	WD FR STUC 100
Roof Structur	03	GABLE/HIP 100
Roof Cover	03	COMP SHNGL 100
Interior Wall	05	DRYWALL 80
Interior Wall	08	DECORATIVE 20
Interior Floo	14	CARPET 60
Interior Floo	12	HARDWOOD 40
Air Condition	03	CENTRAL 100
Heating Type	04	AIR DUCTED 100
Bedrooms		3 100
Bathrooms		3.5 100
Frame	02	WOOD FRAME 100
Stories	1.5	1.5 100
Units		0 100
Occupancy	00	NONE 100
Quality	05	Quality Level 05
DOR CODE	0100	SINGLE FAMILY
MAP NUM		MKT AREA 10
NEIGHBORHOOD/LOC	10001.00	

AREA TYPE	TOTAL GROSS AREA	PCT OF BASE	TOT ADJ AREA	SUBAREA MARKET VALUE
BAS	2,816	100	2,816	382,306
DCK	45	10	4	543
FGR	833	55	458	62,179
FOP	67	30	20	2,715
FOP	114	30	34	4,616
FSP	244	40	98	13,305
FST	49	55	27	3,665
FUS	859	100	859	116,619
UOP	60	20	12	1,629
UOP	112	20	22	2,987
TOTALS	5,318		4,374	593,823

MARKET ADJUSTMENTS

TYPE	MDL	EFF. AREA	TOT ADJ PTS	EFF. BASE RATE	REPL. COST NEW	AYB	EYB	ECON	FNCT		NORM	% COND
0500	01	4,374	106.4800	159.72	698,615	1993	1993	0	0	0	15.00	85.00

1 SFR CUST – 100% - 2017 Heated Area: 3675 HX Base Yr 2017

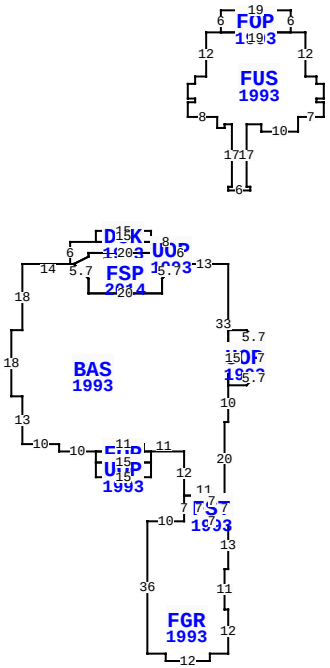

** This building has 11 Sub-Areas

10 MARSH CREEK RD, FERNANDINA BEACH

BLD DATE		LGL DATE	
XF DATE		LAND DATE	05/07/2024 MLU
INC DATE		AG DATE	

VALUATION SUMMARY

VALUATION BY		STANDARD
Tax Group: 5	Tax Dist:	
BUILDING MARKET VALUE		593,823
TOTAL MARKET OB/XF VALUE		19,540
TOTAL LAND VALUE - MARKET		650,000
TOTAL MARKET VALUE		1,263,363
SOH/AGL Deduction		526,200
ASSESSED VALUE		737,163
TOTAL EXEMPTION VALUE	HX HB	50,000
BASE TAXABLE VALUE		687,163
TOTAL JUST VALUE		1,263,363
NCON VALUE		0
INCOME VALUE		
PREVIOUS YEAR MKT VALUE		1,187,298

PERMIT NUM	DESCRIPTION	AMT	ISSUED
B23472	REMODEL	3,500	04/01/2010
8556	NEW CONSTR	145,000	12/11/1992

SALES DATA

OFF RECORD Number	DATE	TYPE INST	Q / U	V / I	RSN CD	SALE PRICE
2716/827	6/05/2024	WD	Q	I	01	1,915,000
GRANTOR: SEARLES ANN W TRUST						
GRANTEE: ALEMAN ROGER & BEVE						
2075/0944	9/13/2016	WD	U	I	11	100
GRANTOR: WEC FAMILY LLC						
GRANTEE: SEARLES ANN W TRUST						

BUILDING NOTES

BUILDING DIMENSIONS

BAS=[YR=1993] W13 UOP=[YR=1993] N6 W8 DCK=[YR=1993] N3 W15 S3 E15$ W22 S6 E1 FSP=[YR=2014] D4 R4 S4 E20 N4 R4 U4 L4 U2 N1 W20 S1 D2 L4 $ R4 U2 N1 E20 S1 D2 R4 E1$ W1 D4 L4 S4 W20 N4 L4 U4 W14 S18 W3 S18 E3 S13 E10 S2 E10 FOP=[YR=1993] S3 UOP=[YR=1993] S4 E15 N4 W15$ E15 N3 W2 N2 W11 S2 W2$ E2 N2 E11 S2 E11 S12 FGR=[YR=1993] S7 W10 S36 E5 S2 E12 N2 E5 N12 W1 N11 E1 N13 W1 FST=[YR=1993] N7 W7 S7 E7$ W7 N7 W4$ E11 N20 E1 N10 UOP=[YR=1993] E5 R4 U4 N7 U4 L4 W5 S15$ N33$ PTR=N20 FUS=[YR=1993] N1 E1 N17 W2 S1 W2 N3 W8 N4 E2 N1 W2 N4 E2 N2 E3 N12 E4 FOP=[YR=1993] N6 E19 S6 W19$ E23 S12 E3 S2 E2 S4 W2 S1 E2 S4 W7 S4 W10 N2 W4 S17 E1 S1 W6$ S20$.

EXTRA FEATURES

LN	OB/XF CODE	DESCRIPTION	BLD	CAP	L	W	UNITS	UT	Adj R	ADJ UNIT PRICE	ORIG COND	YEAR ON	YEAR ACTUAL	Q	% COND	OB/XF MKT VALUE	NOTES
1	0504	FP-ELECTRI	0	100	0	0	1.00	UT	2,000.00	2,000.00	100	1993	1993	3	74	1,480	
2	0858	SCULP CONC	0	100	0	0	245.00	SF	13.00	13.00	100	1993	1993	3	89	2,835	
3	0858	SCULP CONC	0	100	0	0	108.00	SF	13.00	13.00	100	1993	1993	3	89	1,250	
4	1126	CB/STC 8"	0	100	0	0	260.00	SF	8.00	8.00	100	1993	1993	3	66	1,373	
5	0810	CONCRETE A	0	100	0	0	191.00	SF	6.50	6.50	100	1993	1993	3	66	819	
6	0812	CONCRETE C	0	100	0	0	2,136.00	SF	4.00	4.00	100	1993	1993	3	66	5,639	
7	0961	H-SHUTTERS	0	100	20	9	8.00	UT	800.00	800.00	100	2005	2005	3	96	6,144	

LAND DESCRIPTION

TOTAL OB/XF 19,540

LN	USE CODE	CLS	LAND USE DESCRIPTION	CAP	RD	LOC ZONE	FRONT	DEPTH	TOT LND UTS	UNIT TYPE	DT	DPTH FACT	% COND	TOT ADJ	UNIT PRICE	ADJ UNIT PRICE	LAND VALUE	OTHER ADJUSTMENTS AND NOTES	YEAR	DENSITY	DECL	FRZ	YR	CONSRV
1	000140	C	SFR GOLF A	100	0003	RSF-1	0.00	0.00	1.00	LT		1.00	1.00	1.00	650,000.00	650,000.00	650,000							

REVIEW DATE 01/12/2024 BY KBA Total Acres: 0.00 Total Land Value: 650,000 Market: 0 Agricultural: 0 Common: 650,000 PRINTED 08/06/2024 BY SYS