LOT 3
IN OR 2244/1778
MARSH CREEK VILLAGE 1 PB 4/18

HOCKER JAMES R & SUZANNE M
6 MARSH CREEK RD
FERNANDINA BEACH, FL 32034

2024

01-6N-29-1300-0003-0000

BUILDING CHARACTERISTICS

ELEMENT	CD	CONSTRUCTION
Exterior Wall	16	WD FR STUC 50
Exterior Wall	17	CB STUCCO 50
Roof Structur	08	IRREGULAR 100
Roof Cover	03	COMP SHNGL 100
Interior Wall	05	DRYWALL 100
Interior Floo	14	CARPET 60
Interior Floo	11	CLAY TILE 40
Air Condition	03	CENTRAL 100
Heating Type	04	AIR DUCTED 100
Bedrooms		4 100
Bathrooms		5.5 100
Frame	03	MASONRY 100
Stories	2.	2. 100
Units		0 100
Quality	06	Quality Level 06
DOR CODE	0100	SINGLE FAMILY
MAP NUM		MKT AREA 10
NEIGHBORHOOD/LOC	10001.00	

AREA TYPE	TOTAL GROSS AREA	PCT OF BASE	TOT ADJ AREA	SUBAREA MARKET VALUE
BAS	2,612	100	2,612	552,563
FGR	637	55	350	74,042
FGR	698	55	384	81,234
FOP	324	30	97	20,521
FOP	335	30	100	21,155
FST	55	55	30	6,346
FUS	1,266	100	1,266	267,819
FUS	657	100	657	138,987
UOP	134	20	27	5,712
UOP	273	20	55	11,635
TOTALS	7,437		5,667	1,198,840

MARKET ADJUSTMENTS

TYPE	MDL	EFF. AREA	TOT ADJ PTS	EFF. BASE RATE	REPL. COST NEW	AYB	EYB	ECON	FNCT		NORM	% COND
0500	11	5,667	154.9802	232.47	1,317,407	2005	2005	0	0	0	9.00	91.00

1 SFR CUST – 100% - 2019 Heated Area: 4535 HX Base Yr 2019

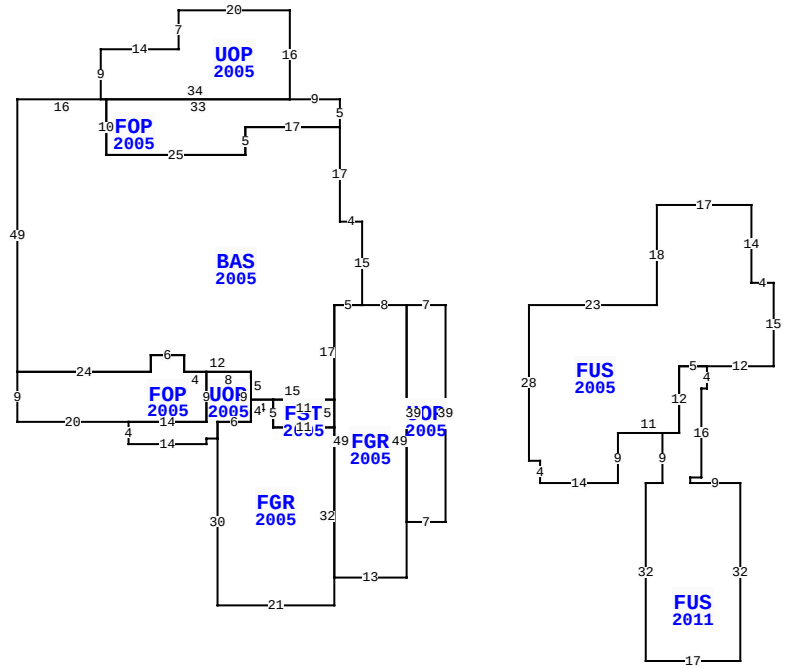

** This building has 11 Sub-Areas

6 MARSH CREEK RD, FERNANDINA BEACH

BLD DATE		LGL DATE	
XF DATE		LAND DATE	05/07/2024 MLU
INC DATE		AG DATE	

NASSAU COUNTY PROPERTY

PAGE 1 of 1 5

VALUATION SUMMARY

VALUATION BY		STANDARD
Tax Group: 5	Tax Dist:	
BUILDING MARKET VALUE		1,198,840
TOTAL MARKET OB/XF VALUE		20,358
TOTAL LAND VALUE - MARKET		650,000
TOTAL MARKET VALUE		1,869,198
SOH/AGL Deduction		752,099
ASSESSED VALUE		1,117,099
TOTAL EXEMPTION VALUE	HX HB	50,000
BASE TAXABLE VALUE		1,067,099
TOTAL JUST VALUE		1,869,198
NCON VALUE		0
INCOME VALUE		
PREVIOUS YEAR MKT VALUE		1,765,811

PERMIT NUM	DESCRIPTION	AMT	ISSUED
M09532	MECH OTHER	0	04/01/2005
B0413199	NEW CONSTR	500,000	07/01/2004

SALES DATA

OFF RECORD Number	DATE	TYPE INST	Q U	V I	RSN CD	SALE PRICE
2244/1778	12/20/2018	WD	Q	I	01	1,300,000
GRANTOR: LIPSCOMB MICHAEL K &						
GRANTEE: HOCKER JAMES ROBERT						
2082/1376	11/07/2016	WD	Q	I	01	1,275,000
GRANTOR: GRIMM JAMES N & NOREE						
GRANTEE: LIPSCOMB MICHAEL K						

BUILDING NOTES

BUILDING DIMENSIONS

UOP=[YR=2005] W7 FGR=[YR=2005] W8 BAS=[YR=2005] N15 W4 N17 FOP=[YR=2005] N5 W9 UOP=[YR=2005] N16 W20 S7 W14 S9 E34 $ W33 S10 E25 N5 E17 $ W17 S5 W25 N10 W16 S49 FOP=[YR=2005] S9 E20 UOP=[YR=2005] S4 E14 N1 E2 FGR=[YR=2005] S30 E21 N32 FST=[YR=2005] N5 W11 S5 E11 $ W11 N5 W4 S4 W6 S3 $ N3 E6 N9 W8 S9 W14$ E14 N9 W4 N3 W6 S3 W24 $ E24 N3 E6 S3 E12 S5 E15 N17 E5 $ W5 S49 E13 N49 $ S39 E7 N39 $ PTR= E15 FUS=[YR=2005] E23 N18 E17 S14 E4 S15 W12 FUS=[YR=2011] S4 W1 S16 W2 S1 E9 S32 W17 N32 E3 N9 E3 N12 E5 $ W5 S12 W11 S9 W14 N4 W2 N28 $ W15 $.

EXTRA FEATURES

LN	OB/XF CODE	DESCRIPTION	BLD	CAP	L	W	UNITS	UT	Adj R	ADJ UNIT PRICE	ORIG COND	YEAR ON	YEAR ACTUAL	Q	% COND	OB/XF MKT VALUE	NOTES
1	0504	FP-ELECTRI	0	100	0	0	2.00	UT	2,000.00	2,000.00	100	2005	2005	3	89	3,560	
2	0812	CONCRETE C	0	100	0	0	2,273.00	SF	4.00	4.00	100	2005	2005	3	86	7,819	
3	0810	CONCRETE A	0	100	0	0	127.00	SF	6.50	6.50	100	2005	2005	3	86	710	
4	1126	CB/STC 8"	0	100	4	6	24.00	SF	8.00	8.00	100	2005	2005	3	86	165	
5	0462	ST/AL FNC	0	100	12	5	60.00	SF	10.00	10.00	100	2005	2005	3	40	240	
6	0450	PREFAB FNC	0	100	0	0	199.00	LF	4.00	4.00	100	2005	2005	3	24	191	
7	0855	CONC PAVER	0	100	0	0	1,260.00	SF	7.00	7.00	100	2006	2006	3	87	7,673	

LAND DESCRIPTION

TOTAL OB/XF 20,358

LN	USE CODE	CLS	LAND USE DESCRIPTION	CAP	RD	LOC ZONE	FRONT	DEPTH	TOT LND UTS	UNIT TYPE	DT	DPTH FACT	% COND	TOT ADJ	UNIT PRICE	ADJ UNIT PRICE	LAND VALUE	OTHER ADJUSTMENTS AND NOTES	YEAR	DENSITY	DECL	FRZ	YR	CONSRV
1	000140	C	SFR GOLF A	100		RSF-1	0.00	0.00	1.00	LT		1.00	1.00	1.00	650,000.00	650,000.00	650,000							

REVIEW DATE 05/12/2019 BY KBA Total Acres: 0.00 Total Land Value: 650,000 Market: 0 Agricultural: 0 Common: 650,000 PRINTED 08/06/2024 BY SYS