LOT 26
IN OR 987/706
HERON OAKS #2 PB 6/10-11

BRADY TERRY
11900 HICKORY GROVE RD
DUNLAP, IL 61525

2024

01-6N-29-0850-0026-0000

BUILDING CHARACTERISTICS

ELEMENT	CD	CONSTRUCTION
Exterior Wall	14	WD SHINGLE 100
Roof Structur	08	IRREGULAR 100
Roof Cover	03	COMP SHNGL 100
Interior Wall	05	DRYWALL 100
Interior Floo	12	HARDWOOD 50
Interior Floo	14	CARPET 50
Air Condition	03	CENTRAL 100
Heating Type	04	AIR DUCTED 100
Bedrooms		3 100
Bathrooms		3.5 100
Frame	02	WOOD FRAME 100
Stories	2.	2. 100
Units		0 100
Quality	05	Quality Level 05
DOR CODE	0100	SINGLE FAMILY
MAP NUM		MKT AREA 10
NEIGHBORHOOD/LOC	10001.010	

AREA TYPE	TOTAL GROSS AREA	PCT OF BASE	TOT ADJ AREA	SUBAREA MARKET VALUE
BAS	2,043	100	2,043	376,781
BAS	180	100	180	33,196
BAS	386	100	386	71,189
FGR	465	55	256	47,213
FGR	110	55	60	11,065
FOP	222	30	67	12,356
FUS	868	100	868	160,081
UOP	14	20	3	553
UOP	384	20	77	14,201
TOTALS	4,672		3,940	726,635

MARKET ADJUSTMENTS

TYPE	MDL	EFF. AREA	TOT ADJ PTS	EFF. BASE RATE	REPL. COST NEW	AYB	EYB	ECON	FNCT		NORM	% COND
0500	11	3,940	138.9240	208.39	821,057	2000	2000	0	0	0	11.50	88.50

1 SFR CUST – 0% - 0 Heated Area: 3477 HX Base Yr

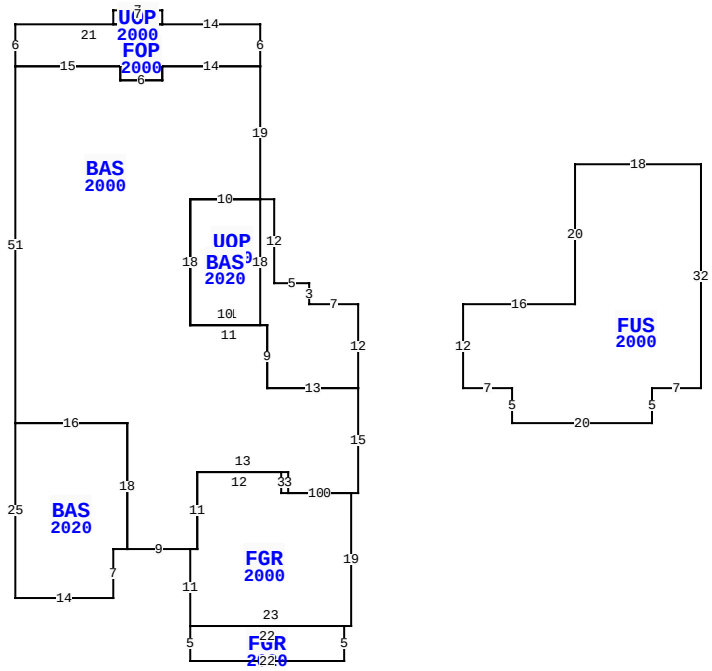

5 LAUREL OAK, FERNANDINA BEACH

BLD DATE		LGL DATE	
XF DATE		LAND DATE	04/10/2024 MLU
INC DATE		AG DATE	

NASSAU COUNTY PROPERTY

PAGE 1 of 2 5

VALUATION SUMMARY

VALUATION BY	STANDARD
Tax Group: 5	Tax Dist:
BUILDING MARKET VALUE	726,635
TOTAL MARKET OB/XF VALUE	29,301
TOTAL LAND VALUE - MARKET	500,000
TOTAL MARKET VALUE	1,255,936
SOH/AGL Deduction	245,281
ASSESSED VALUE	1,010,655
TOTAL EXEMPTION VALUE	0
BASE TAXABLE VALUE	1,010,655
TOTAL JUST VALUE	1,255,936
NCON VALUE	0
INCOME VALUE	
PREVIOUS YEAR MKT VALUE	1,173,577

PERMIT NUM	DESCRIPTION	AMT	ISSUED
20000213	REMODEL	700,000	01/09/2020
19009164	DEMO INTER	0	11/01/2019
B9906103	NEW CONSTR	135,000	05/01/1999

SALES DATA

OFF RECORD Number	DATE	TYPE INST	Q U /	V I /	RSN CD	SALE PRICE
0987/0706	5/21/2001	WD	Q	I		552,000
GRANTOR: GIBSON GARY L & VICKI						
GRANTEE: BRADY TERRY						
0923/1395	3/10/2000	WD	Q	I		420,000
GRANTOR: COALBORN COASTAL HOME						
GRANTEE: GIBSON GARY L & VIC						

BUILDING NOTES

BUILDING DIMENSIONS

UOP=[YR=2000] W7 N3 W5 N12 W2 BAS=[YR=2020] W10 S18 E10 N18 $ BAS=[YR=2000] N19 FOP=[YR=2000] N6 W14 UOP=[YR=2000] N2 W7 S2 E7 $ W21 S6 E15 S2 E6 N2 E14 $ W14 S2 W6 N2 W15 S51 BAS=[YR=2020] S25 E14N7 E2 N18 W16 $ E16 S18 E9 FGR=[YR=2000] S11FGR=[YR=2020] S5 E22 N5 W22$E23 N19 W10 N3 W12 S11 W1 $ E1N11 E13 S3 E10 N15 W13 N9 W11 N18 E10 $ W10 S18 E11 S9 E13 N12 $ PTR= E15 FUS=[YR=2000] E16 N20 E18 S32 W7 S5 W20 N5 W7 N12 $ W15 $.

EXTRA FEATURES

LN	OB/XF CODE	DESCRIPTION	BLD	CAP	L	W	UNITS	UT	Adj R	ADJ UNIT PRICE	ORIG COND	YEAR ON	YEAR ACTUAL	Q	% COND	OB/XF MKT VALUE	NOTES
1	0504	FP-ELECTRI	0	0	0	0	1.00	UT	2,000.00	2,000.00	100	2000	2000	3	84	1,680	
2	0855	CONC PAVER	0	0	0	0	639.00	SF	10.00	10.00	100	2020	2020	3	99	6,326	
3	0855	CONC PAVER	0	0	29	4	116.00	SF	10.00	10.00	100	2020	2020	3	99	1,148	
4	0855	CONC PAVER	0	0	0	0	261.00	SF	10.00	10.00	100	2020	2020	3	99	2,584	
5	0825	BRICK	0	0	0	0	111.00	SF	12.50	12.50	100	2000	2000	3	94	1,304	
6	0446	BOX FNC 6'	0	0	0	0	147.00	LF	20.00	20.00	100	2000	2000	3	20	588	
7	0801	ASPHALT A	0	0	27	18	486.00	SF	3.00	3.00	100	1998	1998	3	50	729	
8	0444	BOX FNC 4'	0	0	0	0	14.00	LF	6.50	6.50	100	2000	2000	3	20	18	
9	0463	FENCE GATE	0	0	0	0	6.00	UT	300.00	300.00	100	2000	2000	3	52	936	
10	0825	BRICK	0	0	0	0	20.00	SF	12.50	12.50	100	2000	2000	3	94	235	

TOTAL OB/XF 15,548

LAND DESCRIPTION

LN	USE CODE	CLS	LAND USE DESCRIPTION	CAP	RD	LOC ZONE	FRONT	DEPTH	TOT LND UTS	UNIT TYPE	DT	DPTH FACT	% COND	TOT ADJ	UNIT PRICE	ADJ UNIT PRICE	LAND VALUE	OTHER ADJUSTMENTS AND NOTES	YEAR	DENSITY	DECL	FRZ	YR	CONSRV
1	000100	C	SFR	0		PUD	0.00	0.00	1.00	LT		1.00	1.00	1.00	500,000.00	500,000.00	500,000							

REVIEW DATE 04/09/2021 BY RK Total Acres: 0.00 Total Land Value: 500,000 Market: 0 Agricultural: 0 Common: 500,000 PRINTED 08/06/2024 BY SYS

LOT 26
IN OR 987/706
HERON OAKS #2 PB 6/10-11

BRADY TERRY
11900 HICKORY GROVE RD
DUNLAP, IL 61525

2024

01-6N-29-0850-0026-0000

NASSAU COUNTY PROPERTY

BUILDING CHARACTERISTICS

ELEMENT	CD	CONSTRUCTION

DOR CODE	0100	SINGLE FAMILY	
MAP NUM		MKT AREA	10
NEIGHBORHOOD/LOC	10001.010		

AREA TYPE	TOTAL GROSS AREA	PCT OF BASE	TOT ADJ AREA	SUBAREA MARKET VALUE
TOTALS				

MARKET ADJUSTMENTS

TYPE	MDL	EFF. AREA	TOT ADJ PTS	EFF. BASE RATE	REPL. COST NEW	AYB	EYB	ECON	FNCT		NORM	% COND

VALUATION SUMMARY

VALUATION BY	STANDARD
Tax Group: 5	Tax Dist:
BUILDING MARKET VALUE	726,635
TOTAL MARKET OB/XF VALUE	29,301
TOTAL LAND VALUE - MARKET	500,000
TOTAL MARKET VALUE	1,255,936
SOH/AGL Deduction	245,281
ASSESSED VALUE	1,010,655
TOTAL EXEMPTION VALUE	0
BASE TAXABLE VALUE	1,010,655
TOTAL JUST VALUE	1,255,936
NCON VALUE	0
INCOME VALUE	
PREVIOUS YEAR MKT VALUE	1,173,577

PERMIT NUM	DESCRIPTION	AMT	ISSUED

BLD DATE		LGL DATE	
XF DATE		LAND DATE	04/10/2024 MLU
INC DATE		AG DATE	

SALES DATA

OFF RECORD Number	DATE	TYPE INST	Q U /	V I /	RSN CD	SALE PRICE
0987/0706	5/21/2001	WD	Q	I		552,000
GRANTOR: GIBSON GARY L & VICKI						
GRANTEE: BRADY TERRY						
0923/1395	3/10/2000	WD	Q	I		420,000
GRANTOR: COALBORN COASTAL HOME						
GRANTEE: GIBSON GARY L & VIC						

BUILDING NOTES

BUILDING DIMENSIONS

EXTRA FEATURES

LN	OB/XF CODE	DESCRIPTION	BLD	CAP	L	W	UNITS	UT	Adj R	ADJ UNIT PRICE	ORIG COND	YEAR ON	YEAR ACTUAL	Q	% COND	OB/XF MKT VALUE	NOTES
11	0825	BRICK	0	0	0	0	35.00	SF	12.50	12.50	100	2000	2000	3	94	411	
12	0825	BRICK	0	0	0	0	120.00	SF	12.50	12.50	100	2000	2000	3	94	1,410	
13	1242	WD DECK A	0	0	0	0	26.00	SF	10.00	10.00	100	2000	2000	3	20	52	
14	0855	CONC PAVER	0	0	0	0	1,200.00	SF	10.00	10.00	100	2020	2020	3	99	11,880	

LAND DESCRIPTION

TOTAL OB/XF 13,753

LN	USE CODE	CLS	LAND USE DESCRIPTION	CAP	RD	LOC ZONE	FRONT	DEPTH	TOT LND UTS	UNIT TYPE	DT	DPTH FACT	% COND	TOT ADJ	UNIT PRICE	ADJ UNIT PRICE	LAND VALUE	OTHER ADJUSTMENTS AND NOTES	YEAR	DENSITY	DECL	FRZ	YR	CONSRV

REVIEW DATE 04/09/2021 BY RK Total Acres: 0.00 Total Land Value: 500,000 Market: 0 Agricultural: 0 Common: 500,000 PRINTED 08/06/2024 BY SYS