LOT 25
HERON OAKS #2 PB 6/10 & 11

HERN WARREN REVOCABLE LIVING TRUST/HERN WARREN TRU
3596 EAST AVENUE
ROCHESTER, NY 14618

2024

01-6N-29-0850-0025-0000

NASSAU COUNTY PROPERTY

BUILDING CHARACTERISTICS

ELEMENT	CD	CONSTRUCTION
Exterior Wall	14	WD SHINGLE 100
Roof Structur	08	IRREGULAR 100
Roof Cover	03	COMP SHNGL 100
Interior Wall	05	DRYWALL 100
Interior Floo	14	CARPET 70
Interior Floo	11	CLAY TILE 30
Air Condition	03	CENTRAL 100
Heating Type	04	AIR DUCTED 100
Bedrooms		3 100
Bathrooms		4 100
Frame	02	WOOD FRAME 100
Stories	2.	2. 100
Units		0 100
Quality	06	Quality Level 06
DOR CODE	0100	SINGLE FAMILY
MAP NUM		MKT AREA 10
NEIGHBORHOOD/LOC	10001.010	

AREA TYPE	TOTAL GROSS AREA	PCT OF BASE	TOT ADJ AREA	SUBAREA MARKET VALUE
BAS	2,094	100	2,094	458,768
DCK	30	10	3	657
DCK	55	10	6	1,314
FGR	600	55	330	72,298
FOP	160	30	48	10,516
FOP	216	30	65	14,241
FUS	671	100	671	147,007
UOP	12	20	2	438
TOTALS	3,838		3,219	705,240

MARKET ADJUSTMENTS

TYPE	MDL	EFF. AREA	TOT ADJ PTS	EFF. BASE RATE	REPL. COST NEW	AYB	EYB	ECON	FNCT		NORM	% COND
0500	11	3,219	152.9399	229.41	738,471	2004	2014	0	0	0	4.50	95.50

1 SFR CUST – 0% - 0 Heated Area: 2765 HX Base Yr

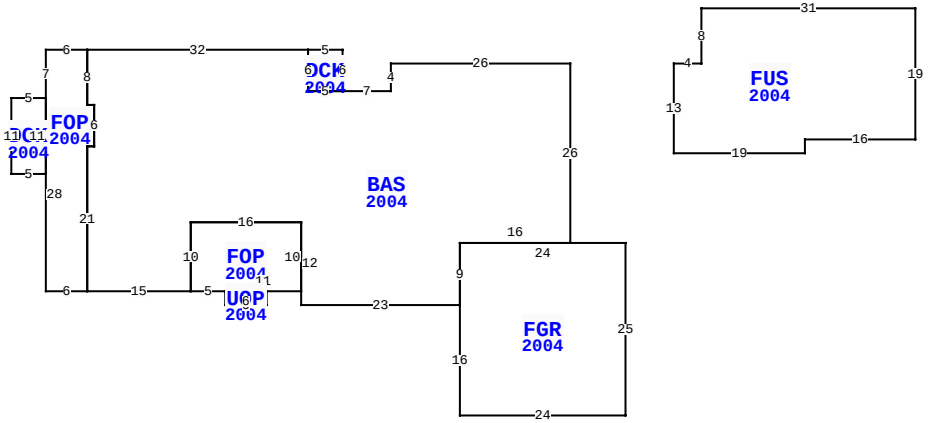

7 LAUREL OAK, FERNANDINA BEACH

BLD DATE		LGL DATE	
XF DATE		LAND DATE	04/10/2024 MLU
INC DATE		AG DATE	

VALUATION SUMMARY

VALUATION BY	STANDARD
Tax Group: 5	Tax Dist:
BUILDING MARKET VALUE	705,240
TOTAL MARKET OB/XF VALUE	24,106
TOTAL LAND VALUE - MARKET	500,000
TOTAL MARKET VALUE	1,229,346
SOH/AGL Deduction	237,324
ASSESSED VALUE	992,022
TOTAL EXEMPTION VALUE	0
BASE TAXABLE VALUE	992,022
TOTAL JUST VALUE	1,229,346
NCON VALUE	0
INCOME VALUE	
PREVIOUS YEAR MKT VALUE	1,149,060

PERMIT NUM	DESCRIPTION	AMT	ISSUED
B0311010	NEW CONSTR	310,000	04/01/2003
R034961	REPAIR/RRF	3,900	04/01/2003

SALES DATA

OFF RECORD Number	DATE	TYPE INST	Q U	V I	RSN CD	SALE PRICE
2711/1398	5/09/2024	WD	U	I	11	100
GRANTOR: HERN WARREN						
GRANTEE: HERN WARREN REVOCAB						
2201/0599	5/25/2018	WD	Q	I	02	920,000
GRANTOR: KIMBROUGH W H JR & SH						
GRANTEE: HERN WARREN						

BUILDING NOTES

BUILDING DIMENSIONS

BAS=[YR=2004] W26 S4 W7 DCK=[YR=2004] N6 W5 S6 E5 $ W5 N6 W32 FOP=[YR=2004] W6 S7 DCK=[YR=2004] W5 S11 E5 N11 $ S28 E6 N21 E1 N6 W1 N8 $ S8 E1 S6 W1 S21 E15 FOP=[YR=2004] E5 UOP=[YR=2004] S2 E6 N2 W6 $ E11 N10 W16 S10 $ N10 E16 S12 E23 FGR=[YR=2004] S16 E24 N25 W24 S9 $ N9 E16 N26 $ PTR= E15 FUS=[YR=2004] E4 N8 E31 S19 W16 S2 W19 N13 $ W15 $.

EXTRA FEATURES

LN	OB/XF CODE	DESCRIPTION	BLD	CAP	L	W	UNITS	UT	Adj R	ADJ UNIT PRICE	ORIG COND	YEAR ON	YEAR ACTUAL	Q	% COND	OB/XF MKT VALUE	NOTES
1	0504	FP-ELECTRI	0	0	0	0	1.00	UT	2,000.00	2,000.00	100	2004	2004	3	88	1,760	
2	0811	CONCRETE B	0	0	0	0	571.00	SF	5.20	5.20	100	2004	2004	3	84	2,494	
3	0810	CONCRETE A	0	0	0	0	372.00	SF	6.50	6.50	100	2004	2004	3	84	2,031	
4	0861	POOL GUNIT	0	0	0	0	283.00	SF	85.00	85.00	100	2004	2004	3	36	8,660	
5	0845	KOOL DECK	0	0	0	0	838.00	SF	7.25	7.25	100	2004	2004	3	84	5,103	
6	0810	CONCRETE A	0	0	0	0	57.00	SF	6.50	6.50	100	2004	2004	3	84	311	
7	0855	CONC PAVER	0	0	0	0	56.00	SF	10.00	10.00	100	2004	2004	3	84	470	
8	0446	BOX FNC 6'	0	0	0	0	250.00	LF	20.00	20.00	100	2004	2004	3	22	1,100	
9	1242	WD DECK A	0	0	8	3	24.00	SF	10.00	10.00	100	2004	2004	3	22	53	
10	0445	BOX FNC 5'	0	0	0	0	5.00	LF	8.10	8.10	100	2004	2004	3	22	9	

TOTAL OB/XF 21,991

LAND DESCRIPTION

LN	USE CODE	CLS	LAND USE DESCRIPTION	CAP	RD	LOC ZONE	FRONT	DEPTH	TOT LND UTS	UNIT TYPE	DT	DPTH FACT	% COND	TOT ADJ	UNIT PRICE	ADJ UNIT PRICE	LAND VALUE	OTHER ADJUSTMENTS AND NOTES	YEAR	DENSITY	DECL	FRZ	YR	CONSRV
1	000100	C	SFR	0		PUD	0.00	0.00	1.00	LT		1.00	1.00	1.00	500,000.00	500,000.00	500,000							

REVIEW DATE 05/12/2019 BY KBA Total Acres: 0.00 Total Land Value: 500,000 Market: 0 Agricultural: 0 Common: 500,000 PRINTED 08/06/2024 BY SYS

LOT 25
HERON OAKS #2 PB 6/10 & 11

HERN WARREN REVOCABLE LIVING TRUST/HERN WARREN TRU
3596 EAST AVENUE
ROCHESTER, NY 14618

2024

01-6N-29-0850-0025-0000

NASSAU COUNTY PROPERTY

BUILDING CHARACTERISTICS

ELEMENT	CD	CONSTRUCTION

DOR CODE	0100	SINGLE FAMILY	
MAP NUM		MKT AREA	10
NEIGHBORHOOD/LOC	10001.010		

AREA TYPE	TOTAL GROSS AREA	PCT OF BASE	TOT ADJ AREA	SUBAREA MARKET VALUE
TOTALS				

MARKET ADJUSTMENTS

TYPE	MDL	EFF. AREA	TOT ADJ PTS	EFF. BASE RATE	REPL. COST NEW	AYB	EYB	ECON	FNCT		NORM	% COND

VALUATION SUMMARY

VALUATION BY	STANDARD
Tax Group: 5	Tax Dist:
BUILDING MARKET VALUE	705,240
TOTAL MARKET OB/XF VALUE	24,106
TOTAL LAND VALUE - MARKET	500,000
TOTAL MARKET VALUE	1,229,346
SOH/AGL Deduction	237,324
ASSESSED VALUE	992,022
TOTAL EXEMPTION VALUE	0
BASE TAXABLE VALUE	992,022
TOTAL JUST VALUE	1,229,346
NCON VALUE	0
INCOME VALUE	
PREVIOUS YEAR MKT VALUE	1,149,060

PERMIT NUM	DESCRIPTION	AMT	ISSUED

BLD DATE		LGL DATE	
XF DATE		LAND DATE	04/10/2024 MLU
INC DATE		AG DATE	

SALES DATA

OFF RECORD Number	DATE	TYPE INST	Q / U	V / I	RSN CD	SALE PRICE
2711/1398	5/09/2024	WD	U	I	11	100
GRANTOR: HERN WARREN						
GRANTEE: HERN WARREN REVOCAB						
2201/0599	5/25/2018	WD	Q	I	02	920,000
GRANTOR: KIMBROUGH W H JR & SH						
GRANTEE: HERN WARREN						

BUILDING NOTES

BUILDING DIMENSIONS

EXTRA FEATURES

LN	OB/XF CODE	DESCRIPTION	BLD	CAP	L	W	UNITS	UT	Adj R	ADJ UNIT PRICE	ORIG COND	YEAR ON	YEAR ACTUAL	Q	% COND	OB/XF MKT VALUE	NOTES
11	1075	TRELLIS G	0	0	11	6	66.00	SF	35.00	35.00	100	2004	2004	3	36	832	
12	0463	FENCE GATE	0	0	0	0	5.00	UT	300.00	300.00	100	2004	2004	3	64	960	
13	1126	CB/STC 8"	0	0	0	0	48.00	SF	8.00	8.00	100	2004	2004	3	84	323	

LAND DESCRIPTION

TOTAL OB/XF 2,115

LN	USE CODE	CLS	LAND USE DESCRIPTION	CAP	RD	LOC ZONE	FRONT	DEPTH	TOT LND UTS	UNIT TYPE	DT	DPTH FACT	% COND	TOT ADJ	UNIT PRICE	ADJ UNIT PRICE	LAND VALUE	OTHER ADJUSTMENTS AND NOTES	YEAR	DENSITY	DECL	FRZ	YR	CONSRV

REVIEW DATE 05/12/2019 BY KBA Total Acres: 0.00 Total Land Value: 500,000 Market: 0 Agricultural: 0 Common: 500,000 PRINTED 08/06/2024 BY SYS