LOT 18 EX S-1
IN OR 1771/630
HERON OAKS #2 PB 6/10 & 11

HERON OAKS LLC
1400 PRUDENTIAL DR, SUITE 7
JACKSONVILLE, FL 32207

2024

01-6N-29-0850-0018-0000

NASSAU COUNTY PROPERTY

BUILDING CHARACTERISTICS

ELEMENT	CD	CONSTRUCTION
Exterior Wall	14	WD SHINGLE 100
Roof Structur	08	IRREGULAR 100
Roof Cover	03	COMP SHNGL 100
Interior Wall	05	DRYWALL 100
Interior Floo	14	CARPET 80
Interior Floo	11	CLAY TILE 20
Air Condition	03	CENTRAL 100
Heating Type	04	AIR DUCTED 100
Bedrooms		3 100
Bathrooms		3.5 100
Frame	02	WOOD FRAME 100
Stories	2.	2. 100
Units		0 100
Quality	05	Quality Level 05
DOR CODE	0100	SINGLE FAMILY
MAP NUM		MKT AREA 10
NEIGHBORHOOD/LOC	10001.010	

AREA TYPE	TOTAL GROSS AREA	PCT OF BASE	TOT ADJ AREA	SUBAREA MARKET VALUE
BAS	2,130	100	2,130	399,622
BAS	180	100	180	33,771
FGR	378	55	208	39,024
FOP	132	30	40	7,505
FUS	805	100	805	151,031
FUS	80	100	80	15,009
PTO	35	5	2	375
UOP	260	20	52	9,756
TOTALS	4,000		3,497	656,093

MARKET ADJUSTMENTS

TYPE	MDL	EFF. AREA	TOT ADJ PTS	EFF. BASE RATE	REPL. COST NEW	AYB	EYB	ECON	FNCT		NORM	% COND
0500	11	3,497	142.1363	213.20	745,560	1999	1999	0	0	0	12.00	88.00

1 SFR CUST - 0% - 0 Heated Area: 3195 HX Base Yr

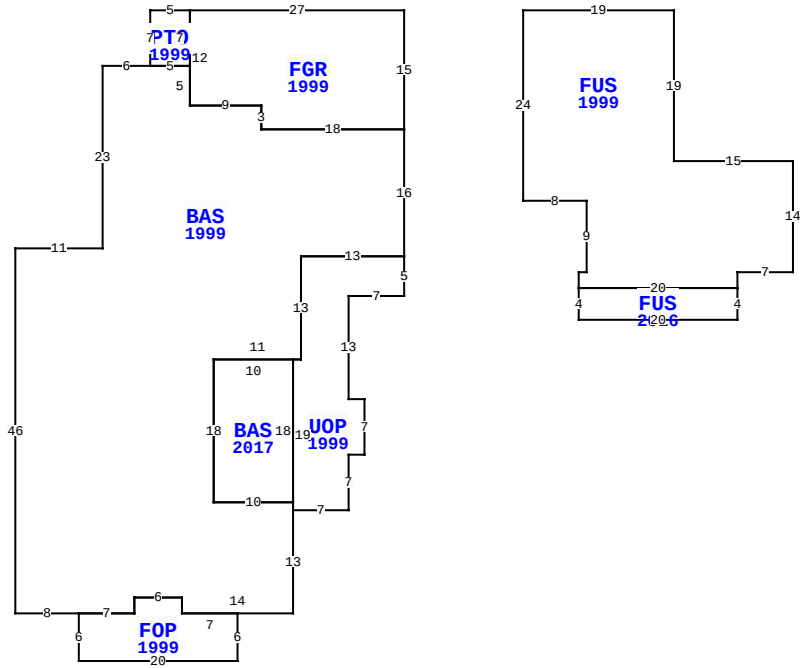

10 HERON OAKS CT, FERNANDINA BEACH

BLD DATE		LGL DATE	
XF DATE		LAND DATE	04/10/2024 MLU
INC DATE		AG DATE	

VALUATION SUMMARY

VALUATION BY	STANDARD
Tax Group: 5	Tax Dist:
BUILDING MARKET VALUE	656,093
TOTAL MARKET OB/XF VALUE	9,273
TOTAL LAND VALUE - MARKET	500,000
TOTAL MARKET VALUE	1,165,366
SOH/AGL Deduction	229,200
ASSESSED VALUE	936,166
TOTAL EXEMPTION VALUE	0
BASE TAXABLE VALUE	936,166
TOTAL JUST VALUE	1,165,366
NCON VALUE	0
INCOME VALUE	
PREVIOUS YEAR MKT VALUE	1,086,297

PERMIT NUM	DESCRIPTION	AMT	ISSUED
B1632554	ADDITION	19,511	06/22/2016
B9805234	NEW CONSTR	143,234	07/01/1998

SALES DATA

OFF RECORD Number	DATE	TYPE INST	Q U	V I	RSN CD	SALE PRICE
1771/0630	12/30/2011	WD	Q	I	02	512,000
GRANTOR: GENTLES SAMUEL T SR &						
GRANTEE: HERON OAKS LLC						
0836/0426	6/04/1998	WD	Q	V		74,700
GRANTOR: AMELIA ISLAND CO						
GRANTEE: GENTLES SAMUEL T SR						

BUILDING NOTES

BUILDING DIMENSIONS

FGR=[YR=1999] W27 PTO=[YR=1999] W5 S7 BAS=[YR=1999] W6 S23 W11 S46 E8 FOP=[YR=1999] S6 E20 N6 W7 N2 W6 S2 W7$ E7 N2 E6 S2 E14 N13 UOP=[YR=1999] E7 N7 E2 N7 W2 N13 E7 N5 W13 S13 W1 BAS=[YR=2017] W10 S18 E10 N18$ S19$ N1 W10 N18 E11 N13 E13 N16 W18 N3W9 N5 W5$ E5 N7$ S12 E9 S3 E18N15$ PTR=E15 FUS=[YR=1999] E19 S19 E15 S14 W7 S2 FUS=[YR=2016] S4 W20 N4 E20$ W20 N2 E1 N9 W8 N24$ W15$.

EXTRA FEATURES

L N	OB/XF CODE	DESCRIPTION	BLD	CAP	L	W	UNITS	UT	Adj R	ADJ UNIT PRICE	ORIG COND	YEAR ON	YEAR ACTUAL	Q	% COND	OB/XF MKT VALUE	NOTES
1	0504	FP-ELECTRI	0	0	0	0	1.00	UT	2,000.00	2,000.00	100	1999	1999	3	83	1,660	
2	0810	CONCRETE A	0	0	0	0	370.00	SF	6.50	6.50	100	1999	1999	3	77	1,852	
3	0810	CONCRETE A	0	0	0	0	219.00	SF	6.50	6.50	100	1999	1999	3	77	1,096	
4	0825	BRICK	0	0	0	0	153.00	SF	12.50	12.50	100	1999	1999	3	93	1,779	
5	1242	WD DECK A	0	0	8	4	32.00	SF	10.00	10.00	100	1999	1999	3	20	64	
6	0810	CONCRETE A	0	0	0	0	329.00	SF	6.50	6.50	100	1999	1999	3	77	1,647	
7	0463	FENCE GATE	0	0	0	0	3.00	UT	300.00	300.00	100	1999	1999	3	48	432	
8	0445	BOX FNC 5'	0	0	0	0	86.00	LF	8.10	8.10	100	1999	1999	3	20	139	
9	0446	BOX FNC 6'	0	0	0	0	151.00	LF	20.00	20.00	100	1999	1999	3	20	604	

LAND DESCRIPTION

TOTAL OB/XF 9,273

L N	USE CODE	CLS	LAND USE DESCRIPTION	CAP	R D	LOC ZONE	FRONT	DEPTH	TOT LND UTS	UNIT TYPE	D T	DPTH FACT	% COND	TOT ADJ	UNIT PRICE	ADJ UNIT PRICE	LAND VALUE	OTHER ADJUSTMENTS AND NOTES	YEAR	DENSITY	DECL	FRZ	YR	CONSRV
1	000100	C	SFR	0		PUD	0.00	0.00	1.00	LT		1.00	1.00	1.00	500,000.00	500,000.00	500,000							

REVIEW DATE 05/12/2019 BY KBA Total Acres: 0.00 Total Land Value: 500,000 Market: 0 Agricultural: 0 Common: 500,000 PRINTED 08/06/2024 BY SYS