LOT 7
IN OR 1815/789
HERON OAKS PB 5/328

WARFIELD MICHAEL J
13 HERON OAKS
FERNANDINA BEACH, FL 32034

2024

01-6N-29-0850-0007-0000

BUILDING CHARACTERISTICS

ELEMENT	CD	CONSTRUCTION
Exterior Wall	14	WD SHINGLE 100
Roof Structur	08	IRREGULAR 100
Roof Cover		N/A 100
Interior Wall	05	DRYWALL 90
Interior Wall	08	DECORATIVE 10
Interior Floo	14	CARPET 70
Interior Floo	11	CLAY TILE 30
Air Condition	03	CENTRAL 100
Heating Type	04	AIR DUCTED 100
Bedrooms		3 100
Bathrooms		3.5 100
Frame	02	WOOD FRAME 100
Stories	2.	2. 100
Units		0 100
Quality	05	Quality Level 05
DOR CODE	0100	SINGLE FAMILY
MAP NUM		MKT AREA 10
NEIGHBORHOOD/LOC	10001.010	

AREA TYPE	TOTAL GROSS AREA	PCT OF BASE	TOT ADJ AREA	SUBAREA MARKET VALUE
BAS	1,583	100	1,583	298,165
BAS	100	100	100	18,835
BAS	115	100	115	21,660
BAS	36	100	36	6,781
BAS	72	100	72	13,562
BAS	114	100	114	21,473
BAS	198	100	198	37,294
FGR	252	55	139	26,181
FGR	313	55	172	32,397
FOP	216	30	65	12,243
TOTALS	3,855		3,349	630,800

MARKET ADJUSTMENTS

TYPE	MDL	EFF. AREA	TOT ADJ PTS	EFF. BASE RATE	REPL. COST NEW	AYB	EYB	ECON	FNCT		NORM	% COND
0500	11	3,349	141.8861	212.83	712,768	1994	2000	0	0	0	11.50	88.50

1 SFR CUST – 100% - 2019 Heated Area: 2930 HX Base Yr 2019

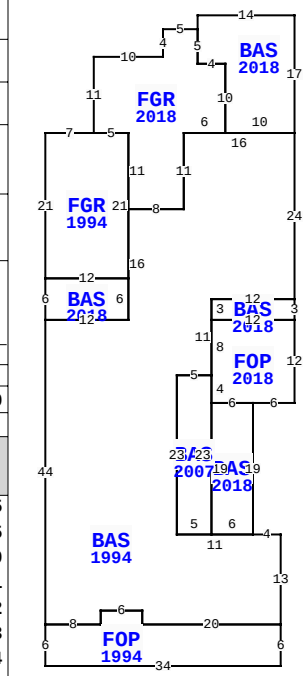

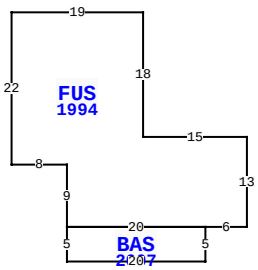

** This building has 12 Sub-Areas

13 HERON OAKS PL, FERNANDINA BEACH

BLD DATE	03/24/2008 DJ	LGL DATE	
XF DATE		LAND DATE	04/10/2024 MLU
INC DATE		AG DATE	

EXTRA FEATURES

LN	OB/XF CODE	DESCRIPTION	BLD	CAP	L	W	UNITS	UT	Adj R	ADJ UNIT PRICE	ORIG COND	YEAR ON	YEAR ACTUAL	Q	% COND	OB/XF MKT VALUE	NOTES
1	0810	CONCRETE A	0	100	0	0	320.00	SF	6.50	6.50	100	2018	2018	3	97	2,018	
2	0810	CONCRETE A	0	100	0	0	117.00	SF	6.50	6.50	100	1994	1994	3	68	517	
3	0445	BOX FNC 5'	0	100	0	0	142.00	LF	8.10	8.10	100	1994	1994	3	20	230	
4	0500	FP-PRE FAB	0	100	0	0	1.00	UT	3,500.00	3,500.00	100	2007	2007	3	91	3,185	
5	0861	POOL GUNIT	0	100	0	0	96.00	SF	85.00	85.00	100	2019	2019	3	90	7,344	
6	0855	CONC PAVER	0	100	0	0	510.00	SF	10.00	10.00	100	2019	2019	3	98	4,998	

NASSAU COUNTY PROPERTY

PAGE 1 of 1 5

VALUATION SUMMARY

VALUATION BY		STANDARD
Tax Group: 5	Tax Dist:	
BUILDING MARKET VALUE		630,800
TOTAL MARKET OB/XF VALUE		18,292
TOTAL LAND VALUE - MARKET		500,000
TOTAL MARKET VALUE		1,149,092
SOH/AGL Deduction		420,950
ASSESSED VALUE		728,142
TOTAL EXEMPTION VALUE	HX HB	50,000
BASE TAXABLE VALUE		678,142
TOTAL JUST VALUE		1,149,092
NCON VALUE		0
INCOME VALUE		
PREVIOUS YEAR MKT VALUE		1,071,307

PERMIT NUM	DESCRIPTION	AMT	ISSUED
B1811120	SWIM POOL	26,975	11/06/2018
B1801722	ADDITION	43,521	02/16/2018
B0618333	REPAIR/RRF	25,000	10/31/2006
B930453	NEW CONSTR	142,428	08/01/1993

SALES DATA

OFF RECORD Number	DATE	TYPE INST	Q / U	V / I	RSN CD	SALE PRICE
1815/0789	9/24/2012	DG	U	I	30	100
GRANTOR: WARFIELD MICHAEL J &						
GRANTEE: WARFIELD MICHAEL J						
1796/1434	5/31/2012	WD	U	I	31	475,000
GRANTOR: SCHROEDER DENNIS A &						
GRANTEE: WARFIELD MICHAEL J						

BUILDING NOTES

BUILDING DIMENSIONS

BAS=[YR=2018] W14 S2 FGR=[YR=2018] W5 S4 W10 S11
FGR=[YR=1994] W7 S21 BAS=[YR=2018] S6 BAS=[YR=1994] S44
FOP=[YR=1994] S6 E34 N6 W20 N2 W6 S2 W8$ E8 N2 E6 S2 E20 N13
W4 BAS=[YR=2018] N19 FOP=[YR=2018] E6 N12 BAS=[YR=2018] N3
W12 S3 E12$ W12 S8 BAS=[YR=2007] W5 S23 E5 N23$ S4 E6$ W6 S19
E6$ W11 N23 E5 N11 E12 N24 W16 S11 W8 S16 W12$ E12 N6 W12$
E12 N21 W5$ E5 S11 E8 N11 E6 N10 W4 N5$ S5 E4 S10 E10 N17$
PTR=E25 FUS=[YR=1994] E19 S18 E15 S13 W6 BAS=[YR=2007] S5
W20 N5 E20$ W20 N9 W8 N22$ W25$.

LAND DESCRIPTION

TOTAL OB/XF 18,292

LN	USE CODE	CLS	LAND USE DESCRIPTION	CAP	RD	LOC ZONE	FRONT	DEPTH	TOT LND UTS	UNIT TYPE	DT	DPTH FACT	% COND	TOT ADJ	UNIT PRICE	ADJ UNIT PRICE	LAND VALUE	OTHER ADJUSTMENTS AND NOTES	YEAR	DENSITY	DECL	FRZ	YR	CONSRV
1	000100	C	SFR	100		PUD	0.00	0.00	1.00	LT		1.00	1.00	1.00	500,000.00	500,000.00	500,000							

REVIEW DATE 06/11/2019 BY DJ Total Acres: 0.00 Total Land Value: 500,000 Market: 0 Agricultural: 0 Common: 500,000 PRINTED 08/06/2024 BY SYS