LOT 4 & PT LOT 3
IN OR 2092/13
HERON OAKS PB 5/328

FREUND ANTON P & CHRISTINE E
19 CASSIA CT
FERNANDINA BEACH, FL 32034

2024

01-6N-29-0850-0004-0000

BUILDING CHARACTERISTICS

ELEMENT	CD	CONSTRUCTION
Exterior Wall	14	WD SHINGLE 100
Roof Structur	08	IRREGULAR 100
Roof Cover	03	COMP SHNGL 100
Interior Wall	05	DRYWALL 100
Interior Floo	12	HARDWOOD 70
Interior Floo	11	CLAY TILE 30
Air Condition	03	CENTRAL 100
Heating Type	04	AIR DUCTED 100
Bedrooms		3 100
Bathrooms		3 100
Frame	02	WOOD FRAME 100
Stories	1.	1. 100
Units		0 100
Quality	05	Quality Level 05
DOR CODE	0100	SINGLE FAMILY
MAP NUM		MKT AREA 10
NEIGHBORHOOD/LOC	10001.010	

AREA TYPE	TOTAL GROSS AREA	PCT OF BASE	TOT ADJ AREA	SUBAREA MARKET VALUE
BAS	1,964	100	1,964	409,836
BAS	40	100	40	8,347
BAS	92	100	92	19,198
BAS	96	100	96	20,033
DCK	160	10	16	3,339
DCK	174	10	17	3,547
DCK	247	10	25	5,217
FGR	284	55	156	32,553
FOP	200	30	60	12,520
FOP	44	30	13	2,713
TOTALS	3,301		2,479	517,303

MARKET ADJUSTMENTS

TYPE	MDL	EFF. AREA	TOT ADJ PTS	EFF. BASE RATE	REPL. COST NEW	AYB	EYB	ECON	FNCT		NORM	% COND
0500	11	2,479	157.1942	235.79	584,523	1993	2000	0	0	0	11.50	88.50

1 SFR CUST – 100% - 2017 Heated Area: 2192 HX Base Yr 2017

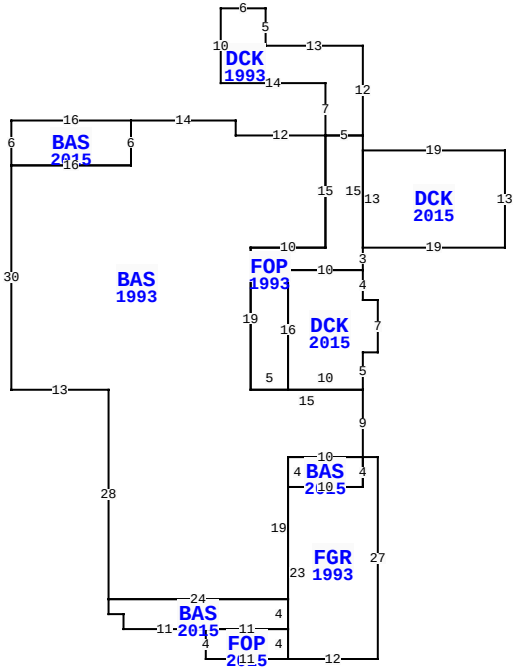

19 CASSIA CT, FERNANDINA BEACH

BLD DATE		LGL DATE	
XF DATE		LAND DATE	04/10/2024 MLU
INC DATE		AG DATE	

NASSAU COUNTY PROPERTY

PAGE 1 of 1 5

VALUATION SUMMARY

VALUATION BY		STANDARD
Tax Group: 5	Tax Dist:	
BUILDING MARKET VALUE		517,303
TOTAL MARKET OB/XF VALUE		13,565
TOTAL LAND VALUE - MARKET		625,000
TOTAL MARKET VALUE		1,155,868
SOH/AGL Deduction		474,625
ASSESSED VALUE		681,243
TOTAL EXEMPTION VALUE	HX HB	50,000
BASE TAXABLE VALUE		631,243
TOTAL JUST VALUE		1,155,868
NCON VALUE		0
INCOME VALUE		
PREVIOUS YEAR MKT VALUE		1,070,422

PERMIT NUM	DESCRIPTION	AMT	ISSUED
B1428742	ADDITION	176,000	05/01/2014
6475	SWIM POOL	10,200	10/30/1992
8312	NEW CONSTR	120,140	08/17/1992

SALES DATA

OFF RECORD Number	DATE	TYPE INST	Q U	V I	RSN CD	SALE PRICE
2092/0013	12/08/2016	TD	Q	I	01	870,000
GRANTOR: DERAISMES JOHN F TRUS						
GRANTEE: FREUND ANTON P & CH						
1494/0865	4/24/2007	WD	U	I	07	100
GRANTOR: FRENCH PETER B & NANC						
GRANTEE: DERAISMES JOHN F TR						

BUILDING NOTES

EXTRA FEATURES

LN	OB/XF CODE	DESCRIPTION	BLD	CAP	L	W	UNITS	UT	Adj R	ADJ UNIT PRICE	ORIG COND	YEAR ON	YEAR ACTUAL	Q	% COND	OB/XF MKT VALUE	NOTES
1	0504	FP-ELECTRI	0	100	0	0	1.00	UT	2,000.00	2,000.00	100	1993	1993	3	74	1,480	
2	0810	CONCRETE A	0	100	0	0	79.00	SF	6.50	6.50	100	1993	1993	3	66	339	
3	1075	TRELLIS G	0	100	22	6	132.00	SF	35.00	35.00	100	1993	1993	3	20	924	
4	0446	BOX FNC 6'	0	100	0	0	139.00	LF	20.00	20.00	100	1993	1993	3	20	556	
5	0861	POOL GUNIT	0	100	0	0	399.00	SF	85.00	85.00	100	1993	1993	3	20	6,783	
6	0801	ASPHALT A	0	100	24	10	240.00	SF	3.00	3.00	100	1993	1993	3	50	360	
7	0845	KOOL DECK	0	100	0	0	646.00	SF	7.25	7.25	100	1993	1993	3	66	3,091	
8	0444	BOX FNC 4'	0	100	0	0	12.00	LF	6.50	6.50	100	1993	1993	3	20	16	
9	0444	BOX FNC 4'	0	100	0	0	12.00	LF	6.50	6.50	100	1993	1993	3	20	16	

BUILDING DIMENSIONS

DCK=[YR=1993] W13 N5 W6 S10 E14 S7 BAS=[YR=1993] W12 N2 W14 BAS=[YR=2015] W16 S6 E16 N6 $ S6 W16 S30 E13 S28 BAS=[YR=2015] S2 E2 S2 E11 FOP=[YR=2015] S4 E11 FGR=[YR=1993] E12 N27 W2 BAS=[YR=2015] W10 S4 E10 N4$ S4 W10 S23$ N4 W11$ E11 N4 W24 $ E24 N19 E10 N9 DCK=[YR=2015] N5 E2 N7 W2 N4 FOP=[YR=1993] N3 DCK=[YR=2015] E19 N13 W19 S13$ N15 W5 S15 W10 S19 E5 N16 E10$ W10 S16 E10$ W15 N19 E10 N15 $ E5 N12 $.

LAND DESCRIPTION

TOTAL OB/XF 13,565

LN	USE CODE	CLS	LAND USE DESCRIPTION	CAP	RD	LOC ZONE	FRONT	DEPTH	TOT LND UTS	UNIT TYPE	DT	DPTH FACT	% COND	TOT ADJ	UNIT PRICE	ADJ UNIT PRICE	LAND VALUE	OTHER ADJUSTMENTS AND NOTES	YEAR	DENSITY	DECL	FRZ	YR	CONSRV
1	000100	C	SFR	100		PUD	0.00	0.00	1.00	LT		1.00	1.00	1.25	500,000.00	625,000.00	625,000							

REVIEW DATE 04/21/2020 BY DJA Total Acres: 0.00 Total Land Value: 625,000 Market: 0 Agricultural: 0 Common: 625,000 PRINTED 08/06/2024 BY SYS