LOT 6
IN OR 2022/127
DUNES COURT SUB PB 4/66

MCMEEL AMELIA PROPERTIES LTD
5300 SUNSET DR #3, SUNSET PLACE
KANSAS CITY, MO 64112

2024

01-6N-29-0450-0006-0000

NASSAU COUNTY PROPERTY

BUILDING CHARACTERISTICS

ELEMENT	CD	CONSTRUCTION
Exterior Wall	15	CONC BLOCK 50
Exterior Wall	17	CB STUCCO 50
Roof Structur	03	GABLE/HIP 100
Roof Cover	08	CLAY TILE 100
Interior Wall	05	DRYWALL 100
Interior Floo	14	CARPET 100
Air Condition	03	CENTRAL 100
Heating Type	04	AIR DUCTED 100
Bedrooms		4 100
Bathrooms		3 100
Frame	02	WOOD FRAME 100
Stories	3.	3. 100
Units		0 100
BUD8 Adjustme	05	DIST 1A 100
Quality	05	Quality Level 05
DOR CODE	0100	SINGLE FAMILY
MAP NUM		MKT AREA 10
NEIGHBORHOOD/LOC	10001.00	

AREA TYPE	TOTAL GROSS AREA	PCT OF BASE	TOT ADJ AREA	SUBAREA MARKET VALUE
BAS	182	100	182	44,726
FGR	336	55	185	45,463
FOP	42	30	13	3,195
FOP	84	30	25	6,144
FOP	98	30	29	7,127
FOP	154	30	46	11,304
FOP	182	30	55	13,516
FOP	196	30	59	14,499
FUS	1,190	100	1,190	292,441
FUS	1,274	100	1,274	313,084
TOTALS	3,738		3,058	751,500

MARKET ADJUSTMENTS

TYPE	MDL	EFF. AREA	TOT ADJ PTS	EFF. BASE RATE	REPL. COST NEW	AYB	EYB	ECON	FNCT		NORM	% COND
0500	12	3,058	196.2038	294.31	900,000	1981	1990	0	0	0	16.50	83.50

1 SFR CUST – 0% - 0 Heated Area: 2646 HX Base Yr

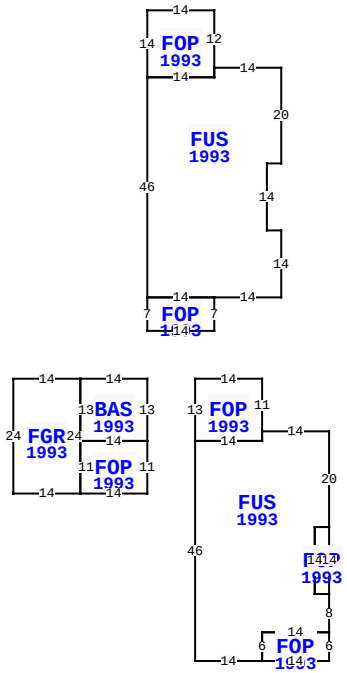

6 DUNES CT, FERNANDINA BEACH

BLD DATE		LGL DATE	
XF DATE		LAND DATE	
INC DATE		AG DATE	

VALUATION SUMMARY

VALUATION BY	STANDARD
Tax Group: 5	Tax Dist:
BUILDING MARKET VALUE	751,500
TOTAL MARKET OB/XF VALUE	1,663
TOTAL LAND VALUE - MARKET	1,100,000
TOTAL MARKET VALUE	1,853,163
SOH/AGL Deduction	0
ASSESSED VALUE	1,853,163
TOTAL EXEMPTION VALUE	0
BASE TAXABLE VALUE	1,853,163
TOTAL JUST VALUE	1,853,163
NCON VALUE	0
INCOME VALUE	
PREVIOUS YEAR MKT VALUE	1,819,959

PERMIT NUM	DESCRIPTION	AMT	ISSUED
E995943	REMODEL	15,000	06/01/1999
R991790	REPAIR/RRF	35,000	06/01/1999
B9805520	REMODEL	720,000	11/01/1998
B9805226	DEMOLITION	0	07/01/1998

SALES DATA

OFF RECORD Number	DATE	TYPE INST	Q / U	V / I	RSN CD	SALE PRICE
2022/0127	12/15/2015	WD	U	I	11	100
GRANTOR: MCMEEL JOHN P IRREVOC						
GRANTEE: MCMEEL AMELIA PROPE						
2022/0122	12/15/2015	WD	U	I	11	100
GRANTOR: MCMEEL SUSAN S IRREVO						
GRANTEE: MCMEEL AMELIA PROPE						

BUILDING NOTES

BUILDING DIMENSIONS

BAS=[YR=1993] W14 FGR=[YR=1993] W14S24 E14 FOP=[YR=1993] E14N11W14S11$N24$ S13 E14 N13$ PTR= E10 FOP=[YR=1993] E14 S11FUS=[YR=1993] E14 S20 FOP=[YR=1993] S14 W3 N14 E3$ W3 S14 E3 S8 FOP=[YR=1993] S6 W14 N6 E14$ W14 S6 W14 N46 E14 N2$ S2W14 N13$ W10 $ PTR= N10 FOP=[YR=1993] E14 N7 FUS=[YR=1993] E14 N14 W3 N14 E3 N20 W14 FOP=[YR=1993] N12 W14 S14 E14 N2 $S2 W14 S46 E14$ W14S7$ S10$.

EXTRA FEATURES

LN	OB/XF CODE	DESCRIPTION	BLD	CAP	L	W	UNITS	UT	Adj R	ADJ UNIT PRICE	ORIG COND	YEAR ON	YEAR ACTUAL	Q	% COND	OB/XF MKT VALUE	NOTES
1	0810	CONCRETE A	0	0	0	0	300.00	SF	6.50	6.50	100	1981	1981	3	35	683	
2	0504	FP-ELECTRI	0	0	0	0	1.00	UT	2,000.00	2,000.00	100	1981	1981	3	49	980	

LAND DESCRIPTION

TOTAL OB/XF 1,663

LN	USE CODE	CLS	LAND USE DESCRIPTION	CAP	RD	LOC ZONE	FRONT	DEPTH	TOT LND UTS	UNIT TYPE	DT	DPTH FACT	% COND	TOT ADJ	UNIT PRICE	ADJ UNIT PRICE	LAND VALUE	OTHER ADJUSTMENTS AND NOTES	YEAR	DENSITY	DECL	FRZ	YR	CONSRV
1	000120	C	SFR OCN FT	0		RG-2	0.00	0.00	1.00	LT		1.00	1.00	1.00	1,100,000.00	1,100,000.00	1,100,000							

REVIEW DATE 05/12/2019 BY KBA Total Acres: 0.00 Total Land Value: 1,100,000 Market: 0 Agricultural: 0 Common: 1,100,000 PRINTED 08/06/2024 BY SYS