LOTS 4 & 5
IN OR 998/505 & OR 998/507
DUNES COURT SUB PB 4/66

MIDDLEMAS WILLIAM P & LYNDA B
4 DUNES COURT
FERNANDINA BEACH, FL 32034

2024

01-6N-29-0450-0004-0000

BUILDING CHARACTERISTICS

ELEMENT	CD	CONSTRUCTION
Exterior Wall	17	CB STUCCO 90
Exterior Wall	16	WD FR STUC 10
Roof Structur	08	IRREGULAR 100
Roof Cover	08	CLAY TILE 100
Interior Wall	05	DRYWALL 90
Interior Wall	06	CUST PANEL 10
Interior Floo	12	HARDWOOD 90
Interior Floo	11	CLAY TILE 10
Air Condition	03	CENTRAL 100
Heating Type	04	AIR DUCTED 100
Bedrooms		6 100
Bathrooms		7.5 100
Frame	02	WOOD FRAME 100
Stories	4.	4. 100
Units		0 100
BUD8 Adjustme	05	DIST 1A 100
Quality	05	Quality Level 05
DOR CODE	0100	SINGLE FAMILY
MAP NUM		MKT AREA 10
NEIGHBORHOOD/LOC	10001.00	

AREA TYPE	TOTAL GROSS AREA	PCT OF BASE	TOT ADJ AREA	SUBAREA MARKET VALUE
BAL	16	15	2	1,158
BAL	16	15	2	1,158
BAL	16	15	2	1,158
BAS	295	100	295	170,806
BAS	776	100	776	449,306
FEP	62	80	50	28,950
FGR	1,080	55	594	343,928
FOP	42	30	13	7,527
FOP	56	30	17	9,843
FOP	80	30	24	13,896
TOTALS	13,248		9,538	5,522,525

MARKET ADJUSTMENTS

TYPE	MDL	EFF. AREA	TOT ADJ PTS	EFF. BASE RATE	REPL. COST NEW	AYB	EYB	ECON	FNCT		NORM	% COND
0500	22	9,538	436.1607	654.24	6,240,141	1983	2000	0	0	0	11.50	88.50

1 SFR CUST – 100% - 2002 Heated Area: 7787 HX Base Yr 2002

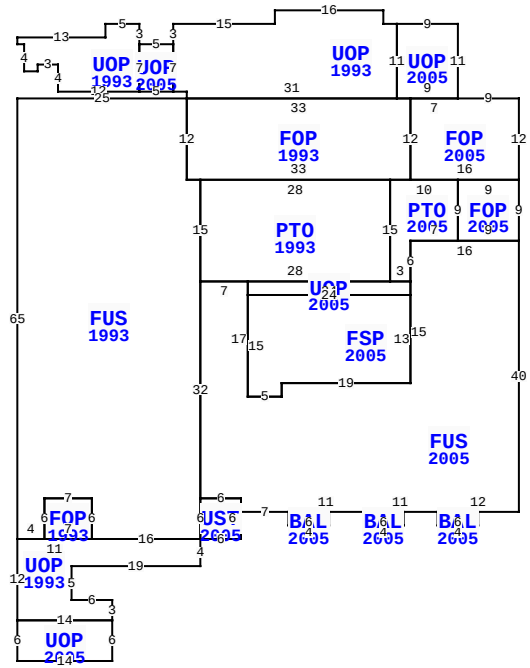

** This building has 39 Sub-Areas

4 DUNES CT, FERNANDINA BEACH

BLD DATE		LGL DATE	
XF DATE		LAND DATE	
INC DATE		AG DATE	

NASSAU COUNTY PROPERTY

PAGE 1 of 2 5

VALUATION SUMMARY

VALUATION BY		STANDARD
Tax Group: 5	Tax Dist:	
BUILDING MARKET VALUE		5,522,525
TOTAL MARKET OB/XF VALUE		42,549
TOTAL LAND VALUE - MARKET		1,925,000
TOTAL MARKET VALUE		7,490,074
SOH/AGL Deduction		5,214,218
ASSESSED VALUE		2,275,856
TOTAL EXEMPTION VALUE	HX HB	50,000
BASE TAXABLE VALUE		2,225,856
TOTAL JUST VALUE		7,490,074
NCON VALUE		0
INCOME VALUE		
PREVIOUS YEAR MKT VALUE		7,244,313

PERMIT NUM	DESCRIPTION	AMT	ISSUED
0610	XFOB	5,000	11/01/1998
E984587	CHNGE SRVC	500	02/01/1998
B9804713	ADDITION	43,940	02/01/1998

SALES DATA

OFF RECORD Number	DATE	TYPE INST	Q U	V I	RSN CD	SALE PRICE
0998/0505	7/18/2001	TD	U	I	12	1,875,000
GRANTOR: DEVINK LODEWIJK J R E						
GRANTEE: MIDDLEMAS WILLIAM P						
0811/0431	10/27/1997	WD	U	I	06	100
GRANTOR: DEVINK LODEWIJK J R						
GRANTEE: DEVINK LODEWIJK J R						

BUILDING NOTES

BUILDING DIMENSIONS

FOP=[YR=2005] W9UOP=[YR=2005]
N11W9UOP=[YR=1993]W2N2W16S2W15S3UOP=[YR=2005]
W5UOP=[YR=1993]N3W5S2W13S1E1S4E2N1E3S4E12N 7$S7E5N7 $ S7 E2
S1 FUS=[YR=1993] W 25 S65 UOP=[YR=1993] S12 UOP=[YR=2005]
S 6 E14 N6 W14 $ E14 N3 W6 N5 E19 N4 W16 FOP=[YR=1993] N6 W7
S6 E7 $ W11 $ E4 N6 E7 S6 E16 UST=[YR=2005] E6 N6 W6 S6 $ N6
FUS=[YR=2005] E 6 S2 E7 BAL=[YR=2005] S2 E1 S1 E4 N 1 E1 N2
W6 $ E11 BAL=[YR=2005] S2 E 1 S1 E4 N1 E1 N2 W6 $ E11
BAL=[YR=2005] S2 E1 S1 E4 N1 E1 N2 W6 $ E12 N40 W16 S6
UOP=[YR=2005] S2 FSP=[YR=2005] S13 W19 S2 W5 N15 E24 $ W24
N2 E24 $ S15 W19 S2 W5 N17 W7 S32 $ N32PTO=[YR=1993] E28
PTO=[YR=2005]E3 N6 E7 FOP=[YR=2005] E9 N9 W9 S9 $ N9 W10 S15

EXTRA FEATURES

L N	OB/XF CODE	DESCRIPTION	BLD	CAP	L	W	UNITS	UT	Adj R	ADJ UNIT PRICE	ORIG COND	YEAR ON	YEAR ACTUAL	Q	% COND	OB/XF MKT VALUE	NOTES
1	0504	FP-ELECTRI	0	100	0	0	2.00	UT	3,000.00	3,000.00	100	1983	1983	3	54	3,240	
2	1126	CB/STC 8"	0	100	0	0	486.00	SF	8.00	8.00	100	1998	1998	3	75	2,916	
3	0825	BRICK	0	100	0	0	108.00	SF	12.50	12.50	100	1998	1998	3	93	1,256	
4	0825	BRICK	0	100	0	0	262.00	SF	12.50	12.50	100	1998	1998	3	93	3,046	
5	0825	BRICK	0	100	0	0	726.00	SF	12.50	12.50	100	2005	2005	3	96	8,712	
6	0825	BRICK	0	100	39	5	195.00	SF	12.50	12.50	100	1998	1998	3	93	2,267	
7	0504	FP-ELECTRI	0	100	0	0	1.00	UT	2,000.00	2,000.00	100	2005	2005	3	89	1,780	
8	0504	FP-ELECTRI	0	100	0	0	1.00	UT	2,000.00	2,000.00	100	2005	2005	3	89	1,780	
9	0410	ELEVATOR	0	100	0	0	1.00	UT	10,000.00	10,000.00	100	2005	2005	3	100	10,000	
10	0861	POOL GUNIT	0	100	0	0	94.00	SF	85.00	85.00	100	2005	2005	3	40	3,196	

LAND DESCRIPTION

TOTAL OB/XF 38,193

L N	USE CODE	CLS	LAND USE DESCRIPTION	CAP	R D	LOC ZONE	FRONT	DEPTH	TOT LND UTS	UNIT TYPE	D T	DPTH FACT	% COND	TOT ADJ	UNIT PRICE	ADJ UNIT PRICE	LAND VALUE	OTHER ADJUSTMENTS AND NOTES	YEAR	DENSITY	DECL	FRZ	YR	CONSRV
1	000120	C	SFR OCN FT	100		RG-2	0.00	0.00	1.00	LT		1.00	1.00	1.00	1,100,000.00	1,100,000.00	1,100,000							
2	000120	C	SFR OCN FT	100		RG-2	0.00	0.00	1.00	LT		1.00	1.00	0.75	1,100,000.00	825,000.00	825,000							

REVIEW DATE 05/12/2019 BY KBA Total Acres: 0.00 Total Land Value: 1,925,000 Market: 0 Agricultural: 0 Common: 1,925,000 PRINTED 08/06/2024 BY SYS

LOTS 4 & 5
IN OR 998/505 & OR 998/507
DUNES COURT SUB PB 4/66

MIDDLEMAS WILLIAM P & LYNDA B
4 DUNES COURT
FERNANDINA BEACH, FL 32034

2024

01-6N-29-0450-0004-0000

BUILDING CHARACTERISTICS

ELEMENT	CD	CONSTRUCTION

DOR CODE	0100	SINGLE FAMILY	
MAP NUM		MKT AREA	10
NEIGHBORHOOD/LOC	10001.00		

AREA TYPE	TOTAL GROSS AREA	PCT OF BASE	TOT ADJ AREA	SUBAREA MARKET VALUE
TOTALS				

MARKET ADJUSTMENTS

TYPE	MDL	EFF. AREA	TOT ADJ PTS	EFF. BASE RATE	REPL. COST NEW	AYB	EYB	ECON	FNCT		NORM	% COND

BLD DATE		LGL DATE	
XF DATE		LAND DATE	
INC DATE		AG DATE	

NASSAU COUNTY PROPERTY

PAGE 2 of 2 5

VALUATION SUMMARY

VALUATION BY		STANDARD
Tax Group: 5	Tax Dist:	
BUILDING MARKET VALUE		5,522,525
TOTAL MARKET OB/XF VALUE		42,549
TOTAL LAND VALUE - MARKET		1,925,000
TOTAL MARKET VALUE		7,490,074
SOH/AGL Deduction		5,214,218
ASSESSED VALUE		2,275,856
TOTAL EXEMPTION VALUE	HX HB	50,000
BASE TAXABLE VALUE		2,225,856
TOTAL JUST VALUE		7,490,074
NCON VALUE		0
INCOME VALUE		
PREVIOUS YEAR MKT VALUE		7,244,313

PERMIT NUM	DESCRIPTION	AMT	ISSUED

SALES DATA

OFF RECORD Number	DATE	TYPE INST	Q / U	V / I	RSN CD	SALE PRICE
0998/0505	7/18/2001	TD	U	I	12	1,875,000
GRANTOR: DEVINK LODEWIJK J R E						
GRANTEE: MIDDLEMAS WILLIAM P						
0811/0431	10/27/1997	WD	U	I	06	100
GRANTOR: DEVINK LODEWIJK J R						
GRANTEE: DEVINK LODEWIJK J R						

BUILDING NOTES

BUILDING DIMENSIONS

EXTRA FEATURES

LN	OB/XF CODE	DESCRIPTION	BLD	CAP	L	W	UNITS	UT	Adj R	ADJ UNIT PRICE	ORIG COND	YEAR ON	YEAR ACTUAL	Q	% COND	OB/XF MKT VALUE	NOTES
11	0825	BRICK	0	100	0	0	263.00	SF	12.50	12.50	100	2005	2005	3	96	3,156	
12	0600	SUMMER KIT	0	100	0	0	1.00	UT	5,000.00	5,000.00	100	2005	2005	3	24	1,200	

LAND DESCRIPTION

TOTAL OB/XF 4,356

LN	USE CODE	CLS	LAND USE DESCRIPTION	CAP	RD	LOC ZONE	FRONT	DEPTH	TOT LND UTS	UNIT TYPE	DT	DPTH FACT	% COND	TOT ADJ	UNIT PRICE	ADJ UNIT PRICE	LAND VALUE	OTHER ADJUSTMENTS AND NOTES	YEAR	DENSITY	DECL	FRZ	YR	CONSRV

REVIEW DATE 05/12/2019 BY KBA Total Acres: 0.00 Total Land Value: 1,925,000 Market: 0 Agricultural: 0 Common: 1,925,000 PRINTED 08/06/2024 BY SYS