TRACT 64
CEDAR POINT
SEA MARSH VILLAGE 2 PB 4/16

BRANDSTATTER THERESE REV TRUST/BRANDSTATTER THERES
320 S COTTAGE HILL AVE
ELMHURST, IL 60126

2024

01-6N-29-0300-0064-0000

BUILDING CHARACTERISTICS

ELEMENT	CD	CONSTRUCTION
Exterior Wall	10	ABOVE AVG 100
Roof Structur	03	GABLE/HIP 100
Roof Cover	03	COMP SHNGL 100
Interior Wall	05	DRYWALL 100
Interior Floo	13	LVT/LAMNT 100
Air Condition	03	CENTRAL 100
Heating Type	04	AIR DUCTED 100
Bedrooms		4 100
Bathrooms		2.5 100
Frame	02	WOOD FRAME 100
Stories	2.	2. 100
Units		0 100
BUD8 Adjustme	05	DIST 1A 100
Occupancy	00	NONE 100
Quality	03	Quality Level 03
DOR CODE	0100	SINGLE FAMILY
MAP NUM		MKT AREA 10
NEIGHBORHOOD/LOC	10001.00	

AREA TYPE	TOTAL GROSS AREA	PCT OF BASE	TOT ADJ AREA	SUBAREA MARKET VALUE
BAS	2,133	100	2,133	258,123
FGR	600	55	330	39,935
FOP	49	30	15	1,815
FSP	300	40	120	14,522
FUS	1,025	100	1,025	124,039
TOTALS	4,107		3,623	438,433

MARKET ADJUSTMENTS

TYPE	MDL	EFF. AREA	TOT ADJ PTS	EFF. BASE RATE	REPL. COST NEW	AYB	EYB	ECON	FNCT		NORM	% COND
0500	01	3,623	97.2000	145.80	528,233	1978	1983	0	0	0	17.00	83.00

1 SFR CUST – 0% - 0 Heated Area: 3158 HX Base Yr

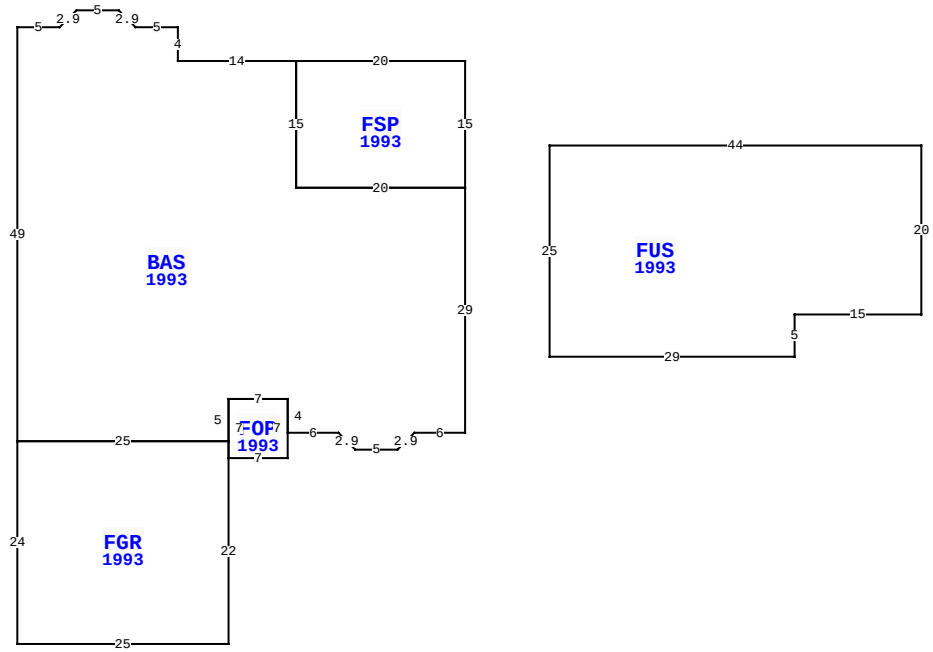

95 SEA MARSH RD, FERNANDINA BEACH

BLD DATE		LGL DATE	
XF DATE		LAND DATE	05/07/2024 MLU
INC DATE		AG DATE	

NASSAU COUNTY PROPERTY

PAGE 1 of 1 5

VALUATION SUMMARY

VALUATION BY	STANDARD
Tax Group: 5	Tax Dist:
BUILDING MARKET VALUE	438,433
TOTAL MARKET OB/XF VALUE	4,295
TOTAL LAND VALUE - MARKET	650,000
TOTAL MARKET VALUE	1,092,728
SOH/AGL Deduction	327,108
ASSESSED VALUE	765,620
TOTAL EXEMPTION VALUE	0
BASE TAXABLE VALUE	765,620
TOTAL JUST VALUE	1,092,728
NCON VALUE	0
INCOME VALUE	
PREVIOUS YEAR MKT VALUE	1,029,650

PERMIT NUM	DESCRIPTION	AMT	ISSUED
230008129	RMDL BTHS	75,000	06/26/2023

SALES DATA

OFF RECORD Number	DATE	TYPE INST	Q U	V I	RSN CD	SALE PRICE
2551/0295	9/16/2021	QC	U	I	11	100
GRANTOR: BRANDSTATTER RICHARD						
GRANTEE: BRANDSTATTER RICHAR						
2363/1313	5/19/2020	WD	Q	I	01	616,900
GRANTOR: SIMMONS LOU J						
GRANTEE: BRANDSTATTER RICHAR						

BUILDING NOTES

BUILDING DIMENSIONS

BAS=[YR=1993;ORIG=-20,0] W14 N4 W5 U2L2 W5 D2L2 W5 S49 E25 N5 E7 S4 E6 D2R2 E5 U2R2 E6 N29 W20 N15 $
FUS=[YR=1993;ORIG=39,35] N5 E15 N20 W44 S25 E29 $
FGR=[YR=1993;ORIG=-53,45] S24 E25 N22 N2 W25 $
FSP=[YR=1993;ORIG=0,0] W20 S15 E20 N15 $
FOP=[YR=1993;ORIG=-28,47] E7 N7 W7 S7 $
.

EXTRA FEATURES

LN	OB/XF CODE	DESCRIPTION	BLD	CAP	L	W	UNITS	UT	Adj R	ADJ UNIT PRICE	ORIG COND	YEAR ON	YEAR ACTUAL	Q	% COND	OB/XF MKT VALUE	NOTES
1	0504	FP-ELECTRI	0	0	0	0	1.00	UT	2,000.00	2,000.00	100	1980	1980	3	46.5	930	
2	0850	PEBBLE WLK	0	0	0	0	966.00	SF	3.50	3.50	100	1985	1985	3	47	1,589	
3	0850	PEBBLE WLK	0	0	0	0	353.00	SF	3.50	3.50	100	1985	1985	3	47	581	
4	0850	PEBBLE WLK	0	0	0	0	252.00	SF	3.50	3.50	100	1985	1985	3	47	415	
5	0855	CONC PAVER	0	0	0	0	237.00	SF	7.00	7.00	100	1985	1985	3	47	780	

LAND DESCRIPTION

TOTAL OB/XF 4,295

LN	USE CODE	CLS	LAND USE DESCRIPTION	CAP	RD	LOC ZONE	FRONT	DEPTH	TOT LND UTS	UNIT TYPE	DT	DPTH FACT	% COND	TOT ADJ	UNIT PRICE	ADJ UNIT PRICE	LAND VALUE	OTHER ADJUSTMENTS AND NOTES	YEAR	DENSITY	DECL	FRZ	YR	CONSRV
1	000140	C	SFR GOLF A	0		RSF-1	0.00	0.00	1.00	LT		1.00	1.00	1.00	650,000.00	650,000.00	650,000							

REVIEW DATE 02/21/2024 BY TW Total Acres: 0.00 Total Land Value: 650,000 Market: 0 Agricultural: 0 Common: 650,000 PRINTED 08/06/2024 BY SYS